3412 NGLE

DC axial compact fan

ebm-papst St. Georgen GmbH & Co. KG
Hermann-Papst-Straße 1
D-78112 St. Georgen
Phone +49 7724 81-0
Fax +49 7724 81-1309
info2@de.ebmpapst.com
www.ebmpapst.com

Nominal data

Type	3412 NGLE	
Nominal voltage	VDC	12
Nominal voltage range	VDC	8 .. 15
Speed	min^{-1}	1950
Power input	W	1.1
Min. ambient temperature	°C	-20
Max. ambient temperature	°C	80
Air flow	m^3/h	61
Sound power level	B	4.0
Sound pressure level	dB(A)	23

ml = max. load · me = max. efficiency · rfa = running at free air · cs = customer specs · cu = customer unit
Subject to alterations

DC axial compact fan

Technical features

Dimensions	92 x 92 x 25 mm
General description	Particular design features: Ball bearings and sleeve bearings available. Some models suitable for use at high ambient temperatures up to 85 °C. General features: Material: fibreglass-reinforced plastic. Impeller PA, housing PBT. Electronic commutation completely integrated. Protected against reverse polarity and locking. Connection via single strands AWG 24, TR 64, bared and tin-plated. Air exhaust over bars. Direction of rotation counter-clockwise seen on rotor. Mass: 100 g.
Connection line	Single strands AWG 24, TR 64, bared and tin-plated.
Direction of rotation	Left, looking at rotor
Direction of air flow	Air exhaust over bars
Bearing	Sintec sleeve bearing
Lifetime L10 at 40 °C	80000 h
Lifetime L10 at maximum temperature	30000 h
Mass	0.100 kg
Housing material	Fiberglass-reinforced PBT plastic
Material of impeller	Fiberglass-reinforced PA plastic
Motor protection	Protected against reverse polarity and locking.
Approval	VDE, CSA, UL

ebm-papst St. Georgen GmbH & Co. KG · Hermann-Papst-Straße 1 · D-78112 St. Georgen · Phone +49 7724 81-0 · Fax +49 7724 81-1309 · info2@de.ebmpapst.com · www.ebmpapst.com

DC axial compact fan

Product drawing

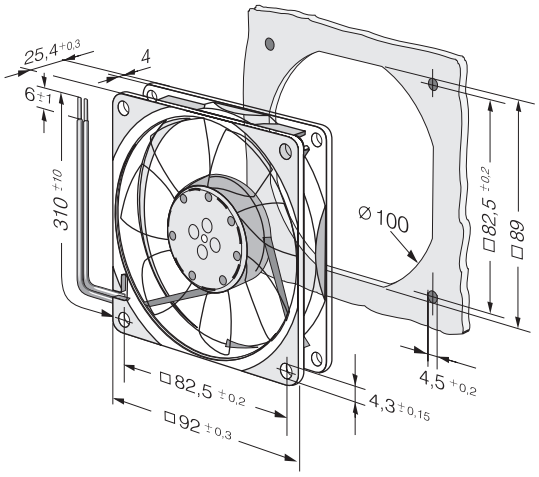

ebm-papst St. Georgen GmbH & Co. KG · Hermann-Papst-Straße 1 · D-78112 St. Georgen · Phone +49 7724 81-0 · Fax +49 7724 81-1309 · info2@de.ebmpapst.com · www.ebmpapst.com

DC axial compact fan

Charts: Air flow

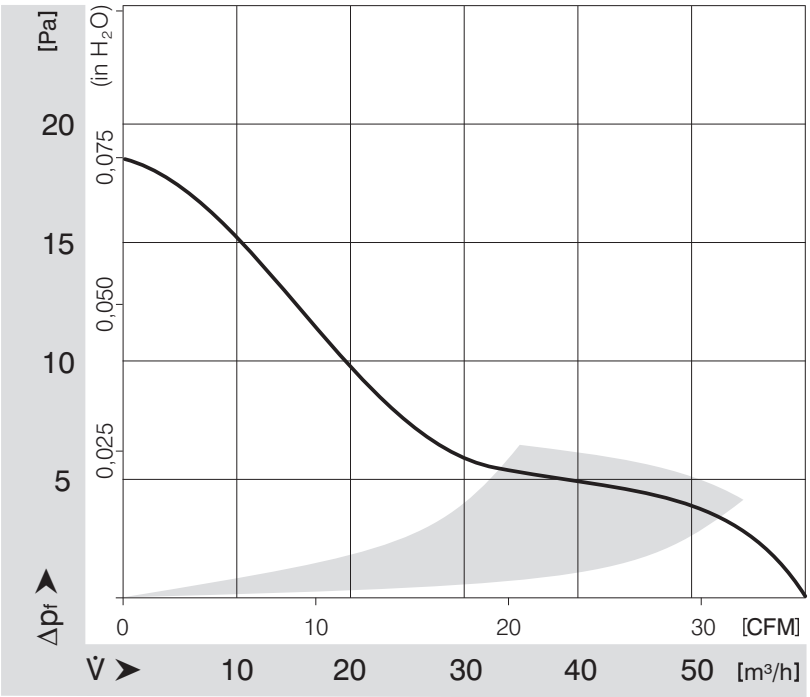

ebm-papst St. Georgen GmbH & Co. KG · Hermann-Papst-Straße 1 · D-78112 St. Georgen · Phone +49 7724 81-0 · Fax +49 7724 81-1309 · info2@de.ebmpapst.com · www.ebmpapst.com