4114 NHH

DC axial compact fan

ebm-papst St. Georgen GmbH & Co. KG
Hermann-Papst-Straße 1
D-78112 St. Georgen
Phone +49 7724 81-0
Fax +49 7724 81-1309
info2@de.ebmpapst.com
www.ebmpapst.com

Nominal data

Type	4114 NHH	
Nominal voltage	VDC	24
Nominal voltage range	VDC	16 .. 30
Speed	min^{-1}	5000
Power input	W	12.4
Min. ambient temperature	°C	-20
Max. ambient temperature	°C	65
Air flow	m^3/h	260
Sound power level	B	6.8
Sound pressure level	dB(A)	60

ml = max. load · me = max. efficiency · rfa = running at free air · cs = customer specs · cu = customer unit
Subject to alterations

DC axial compact fan

Technical features

Dimensions	119 x 119 x 38 mm
General description	Particular design features: Very rigid compression curve for high air flow at high counterpressure. Low operating noise level at high counterpressure. Optional Vario-Pro: Highly flexible software configuration for the fan ensures an easily customisable solution to meet the individual requirements of your application. General features: Housing made of aluminium, impeller made of fibreglass-reinforced PA; housing with grounding lug for M4 x 8 screw (Torx). Electronic commutation completely integrated. Protected against reverse polarity and locking. Connection via single strands AWG 22, UL1007, TR 64, bared and tin-plated Air inlet over bars. Rotational direction clockwise looking at rotor. Mass: 390 g.
Connection line	Single strands AWG 22, UL 1007, TR 64, bared and tin-plated.
Direction of rotation	Clockwise, looking at rotor
Direction of air flow	Inlet over bars
Bearing	Ball bearings
Lifetime L10 at 40 °C	70000 h
Lifetime L10 at maximum temperature	52500 h
Mass	0.390 kg
Housing material	Aluminum with grounding lug for screw M4 x 8 (TORX).
Material of impeller	Fiberglass-reinforced PA plastic
Motor protection	Protected against reverse polarity and locking.
Approval	CE

ebm-papst St. Georgen GmbH & Co. KG · Hermann-Papst-Straße 1 · D-78112 St. Georgen · Phone +49 7724 81-0 · Fax +49 7724 81-1309 · info2@de.ebmpapst.com · www.ebmpapst.com

DC axial compact fan

Product drawing

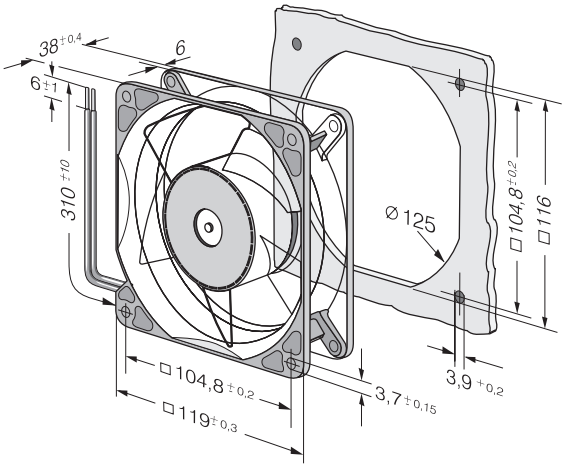

ebm-papst St. Georgen GmbH & Co. KG · Hermann-Papst-Straße 1 · D-78112 St. Georgen · Phone +49 7724 81-0 · Fax +49 7724 81-1309 · info2@de.ebmpapst.com · www.ebmpapst.com

DC axial compact fan

Charts: Air flow

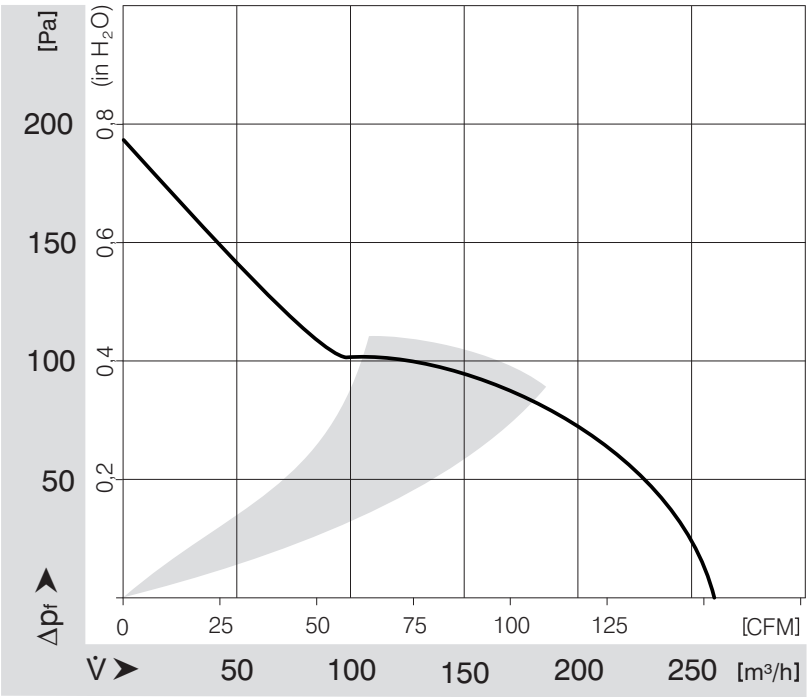

ebm-papst St. Georgen GmbH & Co. KG · Hermann-Papst-Straße 1 · D-78112 St. Georgen · Phone +49 7724 81-0 · Fax +49 7724 81-1309 · info2@de.ebmpapst.com · www.ebmpapst.com