DC axial fan

Series 4300 119 x 119 x 32

- **General description:** DC fan with electronically commutated external rotor motor. Commutation electronics completely integrated. Optional Vario-Pro: Highly adaptable software configuration of the fan enables a tailor-made solution to the specific requirements of your applications.

- **Impeller material:** Fiberglass-reinforced PA plastic

- **Housing material:** Fiberglass-reinforced PBTP plastic

Nominal data		Voltage	Voltage range VDC	Air flow	Speed	Power consumption	Sound level	Sound pressure level	Ambient temperature	L10 service life at 40 °C	L10 service life at max. temp.	Weight
Type	**Motor**	**VDC**	**VDC**	**m³/h**	**1/min**	**W**	**Bel**	**dB(A)**	**°C**	**h**	**h**	**kg**
4312	--	12	6 - 15	170	2800	5.0	5.8	45	-20 .. 75	62500	27500	0.220

Subject to modification

Characteristic: Pressure over air flow

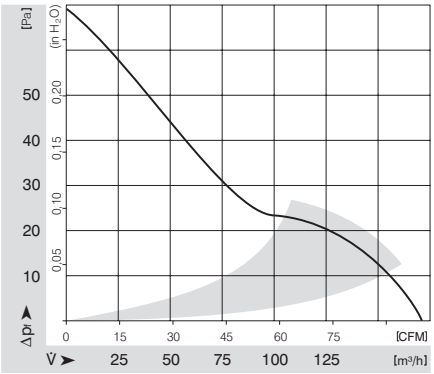

ebmpapst

DC axial fan

Series 4300 119 x 119 x 32

Specific drawing

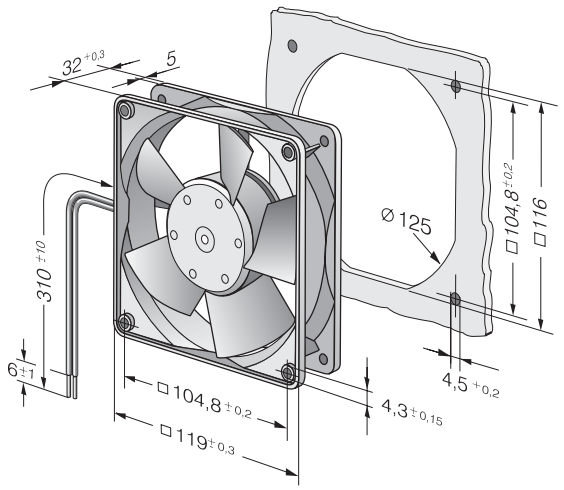

Technical description

- **General description:** DC fan with electronically commutated external rotor motor. Commutation electronics completely integrated. Optional Vario-Pro: Highly adaptable software configuration of the fan enables a tailor-made solution to the specific requirements of your applications.
- **Housing material:** Fiberglass-reinforced PBTP plastic
- **Direction of rotation:** Right, looking at rotor
- **Electrical connection:** 2 single strands AWG 22, TR 64
- **Locked-rotor protection:** Locked-rotor and overload protection
- **Option:** Speed signal, alarm signal, Vario-Pro
- **Impeller material:** Fiberglass-reinforced PA plastic
- **Bearings:** Ball bearings
- **Direction of air flow:** Air exhaust over bars
- **Motor protection:** Reverse-polarity protected. The fan runs only if the polarity is correct.
- **Approvals:** VDE, CSA, UL, CE

Contact

ebm-papst St. Georgen GmbH & Co. KG
Hermann-Papst-Straße 1
D-78112 St. Georgen
Phone +49 (0) 7724 / 81-0
Fax +49 (0) 7724 / 81-1309
info2@de.ebmpapst.com
www.ebmpapst.com