**4412 FGL**

# DC axial compact fan

**ebm-papst St. Georgen GmbH & Co. KG**
Hermann-Papst-Straße 1
D-78112 St. Georgen
Phone +49 7724 81-0
Fax +49 7724 81-1309
info2@de.ebmpapst.com
www.ebmpapst.com

## Nominal data

| Type | 4412 FGL | |
|---|---|---|
| Nominal voltage | VDC | 12 |
| Nominal voltage range | VDC | 7 .. 14 |
| Speed | $min^{-1}$ | 1600 |
| Power input | W | 1.3 |
| Min. ambient temperature | °C | -20 |
| Max. ambient temperature | °C | 75 |
| Air flow | $m^3/h$ | 94 |
| Sound power level | B | 3.9 |
| Sound pressure level | dB(A) | 26 |

ml = max. load · me = max. efficiency · rfa = running at free air · cs = customer specs · cu = customer unit
Subject to alterations

# DC axial compact fan

## Technical features

| | |
|---|---|
| **Dimensions** | 119 x 119 x 25 mm |
| **General description** | Particular design features:<br>Ball bearings and sleeve bearings available.<br>Open loop speed control on request.<br>Tachometer and alarm on request.<br>General features:<br>Material: fibreglass-reinforced plastic. Impeller PA, housing PBT.<br>Electronic commutation completely integrated.<br>Protected against reverse polarity and locking.<br>Connection via single strands AWG 24, TR 64, bared and tin-plated.<br>Air exhaust over bars. Direction of rotation counter-clockwise seen on rotor.<br>Mass: 175 g. |
| **Connection line** | Single strands AWG 24, TR 64, bared and tin-plated. |
| **Locked-rotor protection** | Blocking and overload protection |
| **Direction of rotation** | Left, looking at rotor |
| **Direction of air flow** | Air exhaust over bars |
| **Bearing** | Sintec sleeve bearing |
| **Lifetime L10 at 40 °C** | 80000 h |
| **Lifetime L10 at maximum temperature** | 35000 h |
| **Mass** | 0.175 kg |
| **Housing material** | Fiberglass-reinforced PBT plastic |
| **Material of impeller** | Fiberglass-reinforced PA plastic |
| **Motor protection** | Protected against reverse polarity and locking. |
| **Approval** | VDE, CSA, UL, CE |



ebm-papst St. Georgen GmbH & Co. KG · Hermann-Papst-Straße 1 · D-78112 St. Georgen · Phone +49 7724 81-0 · Fax +49 7724 81-1309 · info2@de.ebmpapst.com · www.ebmpapst.com

# DC axial compact fan

## Product drawing

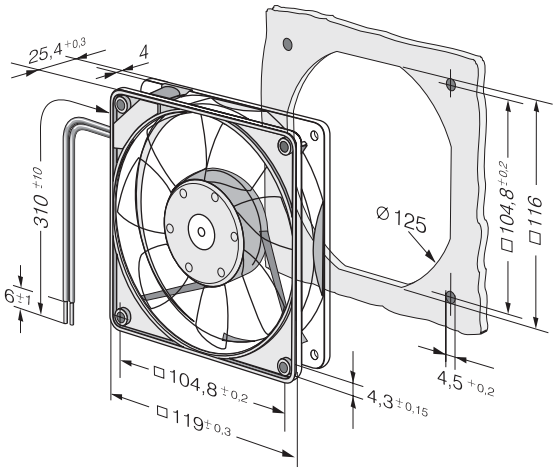




ebm-papst St. Georgen GmbH & Co. KG · Hermann-Papst-Straße 1 · D-78112 St. Georgen · Phone +49 7724 81-0 · Fax +49 7724 81-1309 · info2@de.ebmpapst.com · www.ebmpapst.com

# DC axial compact fan

## Charts: Air flow

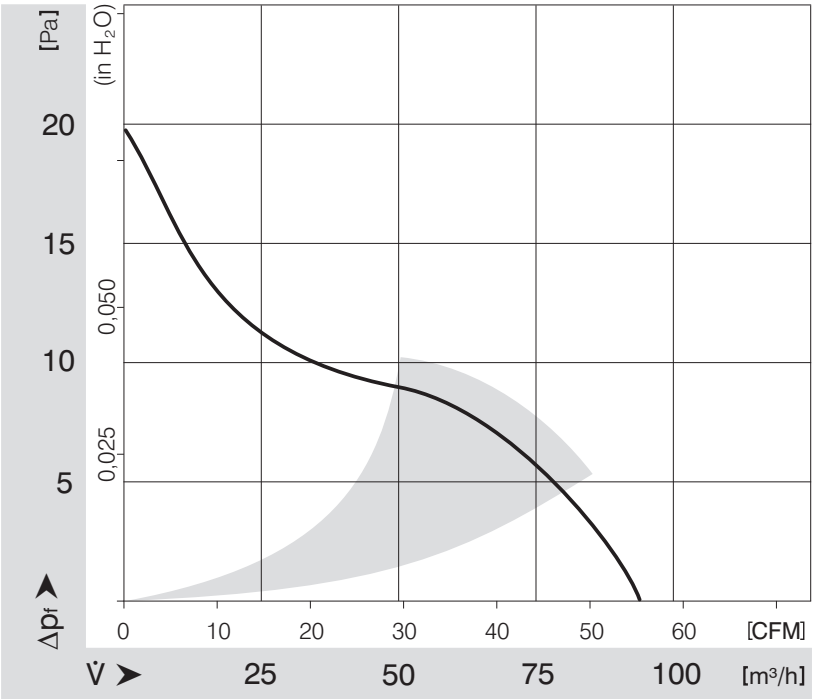




ebm-papst St. Georgen GmbH & Co. KG · Hermann-Papst-Straße 1 · D-78112 St. Georgen · Phone +49 7724 81-0 · Fax +49 7724 81-1309 · info2@de.ebmpapst.com · www.ebmpapst.com