4414 N

DC axial compact fan

sickle-shaped blades (S series)

ebm-papst St. Georgen GmbH & Co. KG
Hermann-Papst-Str. 1
D-78112 St. Georgen
Phone +49 (0) 7724 81-0
Fax +49 (0) 7724 81-1309
info2@de.ebmpapst.com
www.ebmpapst.com

Nominal data

Type	4414 N	
Nominal voltage	VDC	24
Nominal voltage range	VDC	18 .. 28
Speed (rpm)	min^{-1}	3650
Power consumption	W	5.4
Min. ambient temperature	°C	-20
Max. ambient temperature	°C	70
Air flow	m^3/h	205
Sound power level	B	5.6
Sound pressure level	dB(A)	46

ml = Max. load · me = Max. efficiency · fa = Free air · cs = Customer specification · ce = Customer equipment
Subject to change

DC axial compact fan

sickle-shaped blades (S series)

Technical description

Housing material	Glass-fiber reinforced PBT plastic
Impeller material	Glass-fiber reinforced PA plastic
Weight	0.250 kg
Dimensions	119 x 119 x 38 mm
Airflow direction	Exhaust over struts
Direction of rotation	Clockwise, viewed toward rotor
Storage	Ball bearing
Service life L10 at 40 °C	62500 h
Service life L10 at maximum temperature	30000 h
Cable	Leads AWG 24, TR 64, stripped and tin-plated.
Motor protection	Protection against reverse polarity and blocked rotor.
Option	Control inputs and alarm and speed signals.

ebm-papst St. Georgen GmbH & Co. KG · Hermann-Papst-Str. 1 · D-78112 St. Georgen · Phone +49 (0) 7724 81-0 · Fax +49 (0) 7724 81-1309 · info2@de.ebmpapst.com · www.ebmpapst.com

DC axial compact fan

sickle-shaped blades (S series)

Product drawing

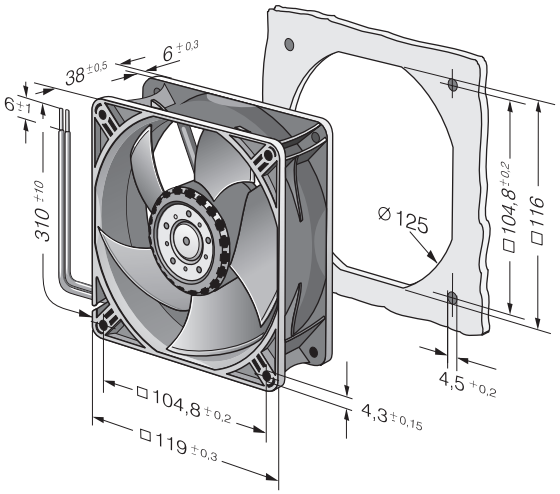

ebm-papst St. Georgen GmbH & Co. KG · Hermann-Papst-Str. 1 · D-78112 St. Georgen · Phone +49 (0) 7724 81-0 · Fax +49 (0) 7724 81-1309 · info2@de.ebmpapst.com · www.ebmpapst.com

DC axial compact fan

sickle-shaped blades (S series)

Curves: Air performance

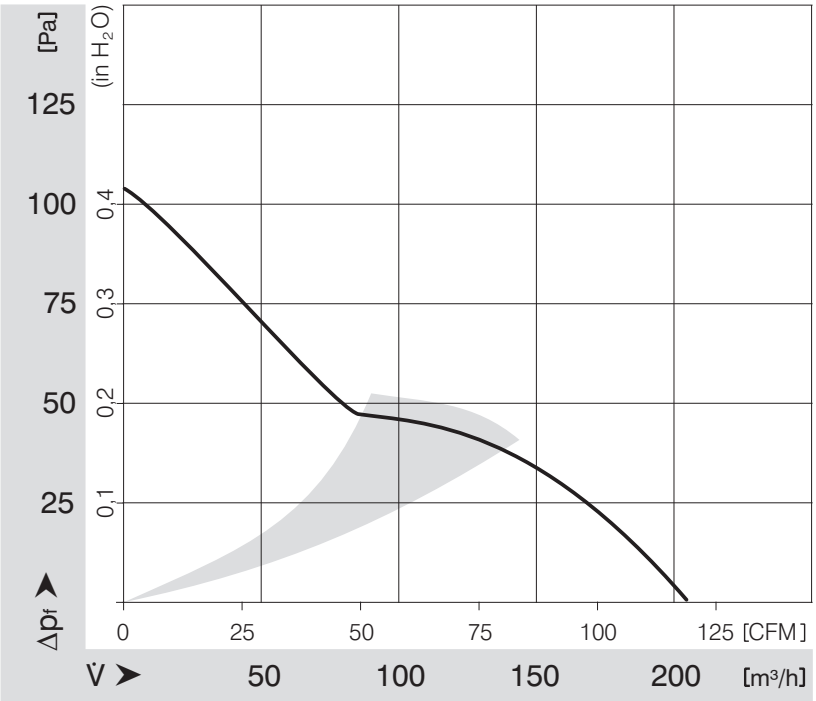

ebm-papst St. Georgen GmbH & Co. KG · Hermann-Papst-Str. 1 · D-78112 St. Georgen · Phone +49 (0) 7724 81-0 · Fax +49 (0) 7724 81-1309 · info2@de.ebmpapst.com · www.ebmpapst.com