**4414 M**

# DC axial compact fan

**ebm-papst St. Georgen GmbH & Co. KG**
Hermann-Papst-Str. 1
D-78112 St. Georgen
Phone +49 (0) 7724 81-0
Fax +49 (0) 7724 81-1309
info2@de.ebmpapst.com
www.ebmpapst.com

## Nominal data

| Type | 4414 M | |
|---|---|---|
| Nominal voltage | VDC | 24 |
| Nominal voltage range | VDC | 18 .. 28 |
| Speed (rpm) | $min^{-1}$ | 3300 |
| Power consumption | W | 4.1 |
| Min. ambient temperature | °C | -20 |
| Max. ambient temperature | °C | 75 |
| Air flow | $m^3/h$ | 184 |
| Sound power level | B | 5.3 |
| Sound pressure level | dB(A) | 42 |

ml = Max. load · me = Max. efficiency · fa = Free air · cs = Customer specification · ce = Customer equipment
Subject to change

# DC axial compact fan

## Technical description

| | |
|---|---|
| **Housing material** | Glass-fiber reinforced PBT plastic |
| **Impeller material** | Glass-fiber reinforced PA plastic |
| **Weight** | 0.250 kg |
| **Dimensions** | 119 x 119 x 38 mm |
| **Airflow direction** | Exhaust over struts |
| **Direction of rotation** | Clockwise, viewed toward rotor |
| **Storage** | Ball bearing |
| **Service life L10 at 40 °C** | 65000 h |
| **Service life L10 at maximum temperature** | 25000 h |
| **Cable** | Leads AWG 24, TR 64, stripped and tin-plated. |
| **Motor protection** | Protection against reverse polarity and blocked rotor. |
| **Option** | Control inputs and alarm and speed signals. |



ebm-papst St. Georgen GmbH & Co. KG · Hermann-Papst-Str. 1 · D-78112 St. Georgen · Phone +49 (0) 7724 81-0 · Fax +49 (0) 7724 81-1309 · info2@de.ebmpapst.com · www.ebmpapst.com

# DC axial compact fan

## Product drawing

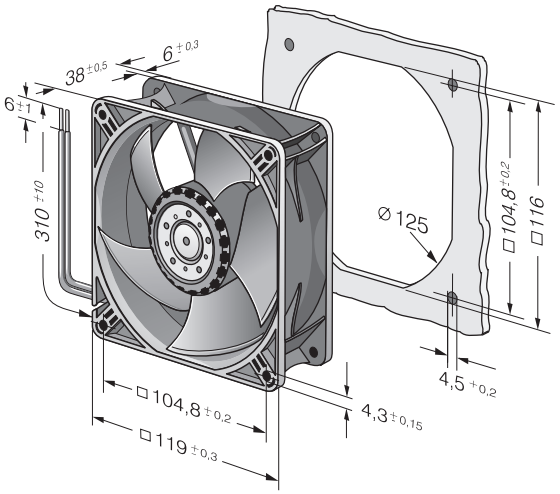




ebm-papst St. Georgen GmbH & Co. KG · Hermann-Papst-Str. 1 · D-78112 St. Georgen · Phone +49 (0) 7724 81-0 · Fax +49 (0) 7724 81-1309 · info2@de.ebmpapst.com · www.ebmpapst.com

# DC axial compact fan

## Curves: Air performance

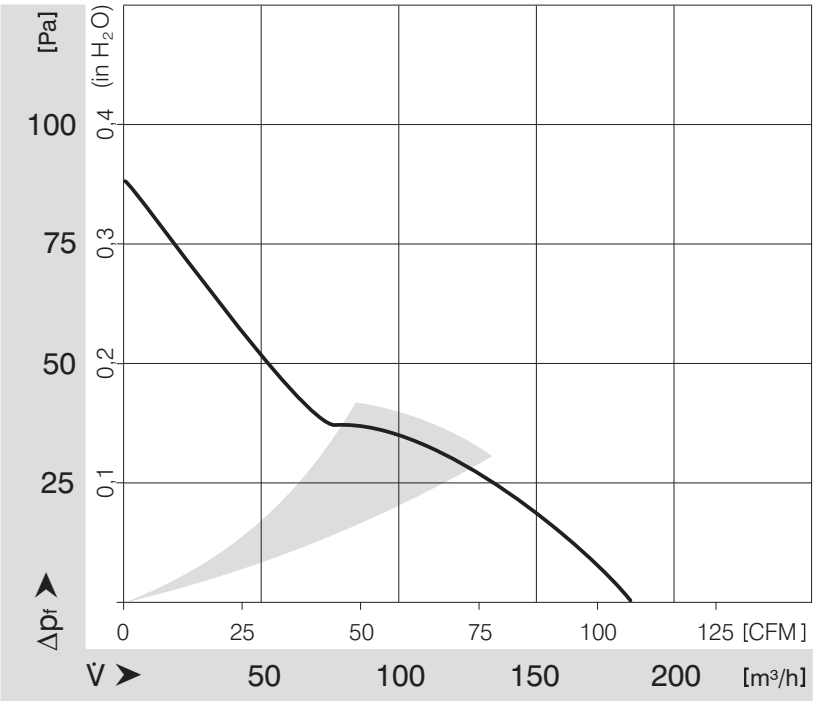




ebm-papst St. Georgen GmbH & Co. KG · Hermann-Papst-Str. 1 · D-78112 St. Georgen · Phone +49 (0) 7724 81-0 · Fax +49 (0) 7724 81-1309 · info2@de.ebmpapst.com · www.ebmpapst.com