AC axial fan

Series 4000 Z 119 x 119 x 38

- **General description:** AC fan with external rotor shaded-pole motor.
- **Impeller material:** Metal
- **Housing material:** Metal

Nominal data		Voltage	Frequency	Air flow	Speed	Power consumption	Sound level	Sound pressure level	Ambient temperature	L10 service life at 40 °C	L10 service life at max. temp.	Weight
Type	**Motor**	**VAC**	**Hz**	**m³/h**	**1/min**	**W**	**Bel**	**dB(A)**	**°C**	**h**	**h**	**kg**
4606 Z	--	115	60	180	3100	18.0	5.6	45	-40 .. 85	40000	15000	0.540

Subject to modification

Characteristic: Pressure over air flow

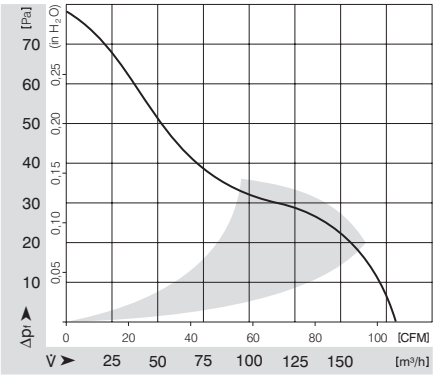

ebmpapst

AC axial fan

Series 4000 Z 119 x 119 x 38

Specific drawing

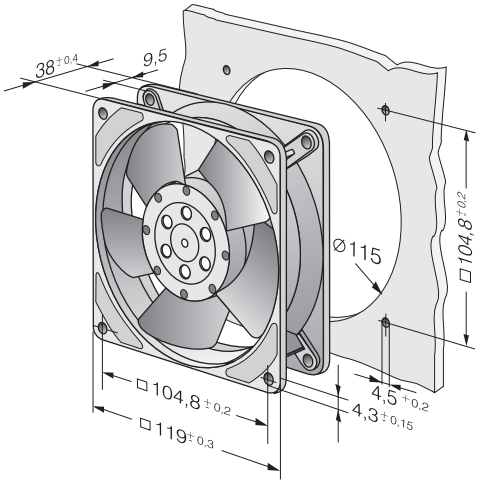

Technical description

- **General description:** AC fan with external rotor shaded-pole motor.
- **Housing material:** Metal
- **Direction of rotation:** Right, looking at rotor
- **Electrical connection:** 2 flat plugs 2.8 x 0.5 mm. Housing with grounding lug and tapping screw M4 x 8 (TORX).
- **Approvals:** VDE, CSA, UL, CE
- **Impeller material:** Metal
- **Bearings:** Ball bearings
- **Direction of air flow:** Air exhaust over bars
- **Motor protection:** Protected from overload using impedance protection
- **Option:** Available with electrical terminals on single strands that are 310 mm in length.

Contact

ebm-papst St. Georgen GmbH & Co. KG
Hermann-Papst-Straße 1
D-78112 St. Georgen
Phone +49 (0) 7724 / 81-0
Fax +49 (0) 7724 / 81-1309
info2@de.ebmpapst.com
www.ebmpapst.com