5118 N

DC axial compact fan

ebm-papst St. Georgen GmbH & Co. KG
Hermann-Papst-Straße 1
D-78112 St. Georgen
Phone +49 7724 81-0
Fax +49 7724 81-1309
info2@de.ebmpapst.com
www.ebmpapst.com

Nominal data

Type	5118 N	
Nominal voltage	VDC	48
Nominal voltage range	VDC	24 .. 60
Speed	min^{-1}	2900
Power input	W	9.5
Min. ambient temperature	°C	-25
Max. ambient temperature	°C	72
Air flow	m^3/h	250
Sound power level	B	6.1
Sound pressure level	dB(A)	48

ml = max. load · me = max. efficiency · rfa = running at free air · cs = customer specs · cu = customer unit
Subject to alterations

DC axial compact fan

Technical features

Dimensions	135 x 135 x 38 mm
General description	General features: Housing and impeller made of aluminium; housing with grounding lug for M4 x 8 screw (Torx). 48 V version incl. screws. Electronic commutation completely integrated. Protected against reverse polarity and locking. Connection via single strands AWG 22, TR 64, bared and tin-plated. Air exhaust over bars. Direction of rotation counter-clockwise seen on rotor. Mass: 650 g.
Connection line	Single strands AWG 22, TR 64, bared and tin-plated.
Locked-rotor protection	Electronic blocking protection
Direction of rotation	Left, looking at rotor
Direction of air flow	Air exhaust over bars
Bearing	Ball bearings
Lifetime L10 at 40 °C	80000 h
Lifetime L10 at maximum temperature	37500 h
Mass	0.650 kg
Housing material	Aluminum. Housing with grounding lug for screw M4 x 8 (TORX).
Material of impeller	Aluminum
Motor protection	Protected against reverse polarity and locking.
Approval	CE

ebm-papst St. Georgen GmbH & Co. KG · Hermann-Papst-Straße 1 · D-78112 St. Georgen · Phone +49 7724 81-0 · Fax +49 7724 81-1309 · info2@de.ebmpapst.com · www.ebmpapst.com

DC axial compact fan

Product drawing

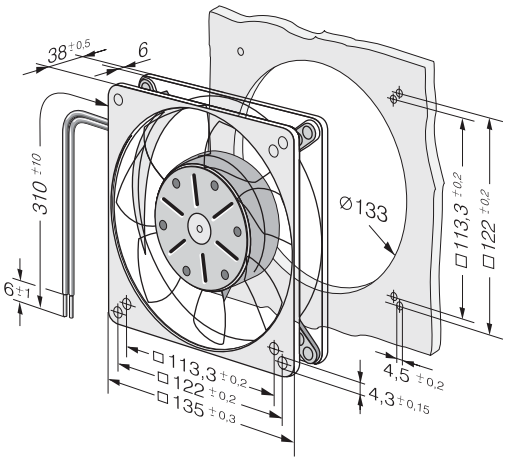

ebm-papst St. Georgen GmbH & Co. KG · Hermann-Papst-Straße 1 · D-78112 St. Georgen · Phone +49 7724 81-0 · Fax +49 7724 81-1309 · info2@de.ebmpapst.com · www.ebmpapst.com

DC axial compact fan

Charts: Air flow

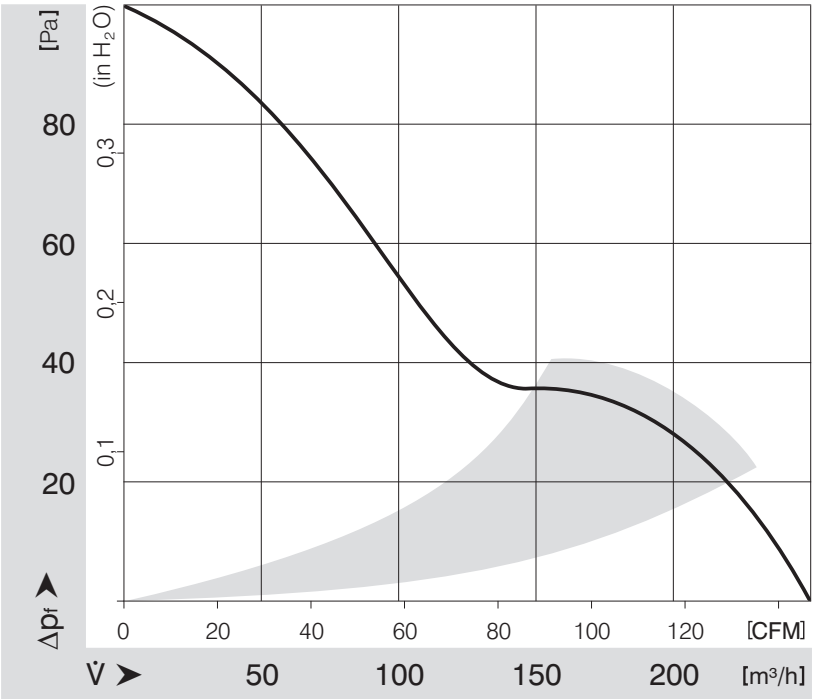

ebm-papst St. Georgen GmbH & Co. KG · Hermann-Papst-Straße 1 · D-78112 St. Georgen · Phone +49 7724 81-0 · Fax +49 7724 81-1309 · info2@de.ebmpapst.com · www.ebmpapst.com