5214 NN

DC axial compact fan

ebm-papst St. Georgen GmbH & Co. KG
Hermann-Papst-Straße 1
78112 St. Georgen
Phone: +49 7724 81-0
Fax: +49 7724 81-1309
www.ebmpapst.com
info2@de.ebmpapst.com

Nominal data

Type	5214 NN	
Nominal voltage	[VDC]	24
Nominal voltage range	[VDC]	12 .. 28
Speed	[min^{-1}]	3150
Power input	[W]	6.0
Min. ambient temperature	[°C]	-20
Max. ambient temperature	[°C]	75
Air flow	[m^3/h]	216
Sound power level	[B]	5.6
Sound pressure level	[dB(A)]	46

ml = max. load · me = max. efficiency · rfa = running at free air · cs = customer specs · cu = customer unit
Subject to alterations

DC axial compact fan

Technical features

Dimensions	127 x 127 x 38 mm
General description	Optional Vario-Pro: Highly flexible software configuration for the fan ensures an easily customizable solution to meet the individual requirements of your application. Electronic commutation completely integrated.
Connection line	Single strands AWG 22, TR 64, bared and tin-plated.
Locked-rotor protection	With electronic blocking and overload protection
Direction of protection	Left, looking at rotor
Direction of air flow	Air exhaust over bars
Bearing	Ball bearings
Lifetime L10 at 40 °C	57500 h
Lifetime L10 at maximum temperature	25000 h
Mass	0.310 kg
Housing material	Fiberglass-reinforced PBT plastic
Material of impeller	Fiberglass-reinforced PA plastic
Motor protection	Protected against reverse polarity and locking.
Option	Speed signal
Approval	VDE, CSA, UL, CE

ebm-papst St. Georgen GmbH & Co. KG · Hermann-Papst-Straße 1 · 78112 St. Georgen · Phone: +49 7724 81-0 · Fax: +49 7724 81-1309 · www.ebmpapst.com · info2@de.ebmpapst.com

DC axial compact fan

Product drawing

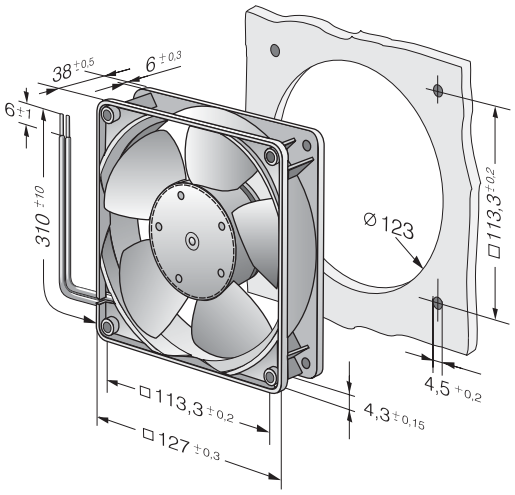

ebm-papst St. Georgen GmbH & Co. KG · Hermann-Papst-Straße 1 · 78112 St. Georgen · Phone: +49 7724 81-0 · Fax: +49 7724 81-1309 · www.ebmpapst.com · info2@de.ebmpapst.com

DC axial compact fan

Charts: Air flow

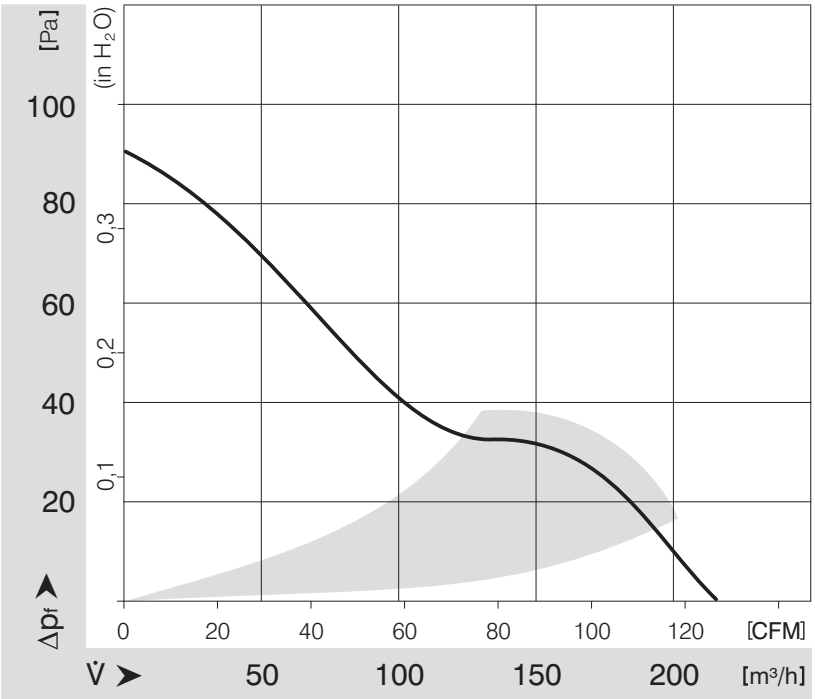

ebm-papst St. Georgen GmbH & Co. KG · Hermann-Papst-Straße 1 · 78112 St. Georgen · Phone: +49 7724 81-0 · Fax: +49 7724 81-1309 · www.ebmpapst.com · info2@de.ebmpapst.com