5950

# AC axial compact fan

**ebm-papst St. Georgen GmbH & Co. KG**
Hermann-Papst-Straße 1
78112 St. Georgen
Phone: +49 7724 81-0
Fax: +49 7724 81-1309
www.ebmpapst.com
info2@de.ebmpapst.com

## Nominal data

| Type | 5950 | |
|---|---|---|
| Nominal voltage | [VAC] | 230 |
| Frequency | [Hz] | 50 |
| Speed | [min-1] | 2700 |
| Power input | [W] | 18.0 |
| Min. ambient temperature | [°C] | -20 |
| Max. ambient temperature | [°C] | 50 |
| Air flow | [m3/h] | 180 |
| Sound power level | [B] | 5.5 |
| Sound pressure level | [dB(A)] | 44 |

ml = max. load · me = max. efficiency · rfa = running at free air · cs = customer specs · cu = customer unit
Subject to alterations

# AC axial compact fan

## Technical features

| | |
|---|---|
| **Dimensions** | 127 x 127 x 38 mm |
| **General description** | AC fan with internal rotor shaded-pole motor. |
| **Connection line** | 2 flat plugs 2.8 x 0.8 mm. Housing with grounding lug and tapping screw M4 x 6 (TORX). |
| **Direction of protection** | Left, looking at rotor |
| **Direction of air flow** | Air exhaust over bars |
| **Bearing** | Sintec sleeve bearing system |
| **Lifetime L10 at 40 °C** | 40000 h |
| **Lifetime L10 at maximum temperature** | 32500 h |
| **Mass** | 0.570 kg |
| **Housing material** | Metal |
| **Material of impeller** | Fiberglass-reinforced PA plastic |
| **Motor protection** | Protected from overload using impedance protection |
| **Approval** | VDE, CSA, UL, CE |



ebm-papst St. Georgen GmbH & Co. KG · Hermann-Papst-Straße 1 · 78112 St. Georgen · Phone: +49 7724 81-0 · Fax: +49 7724 81-1309 · www.ebmpapst.com · info2@de.ebmpapst.com

# AC axial compact fan

## Product drawing

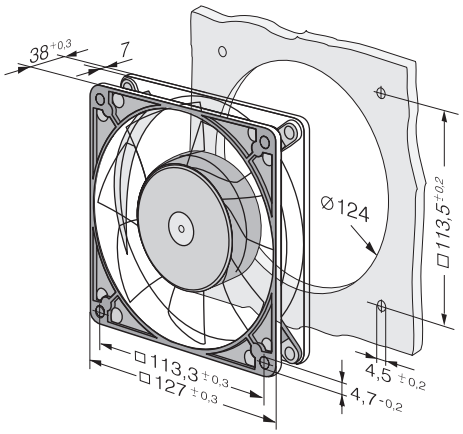




ebm-papst St. Georgen GmbH & Co. KG · Hermann-Papst-Straße 1 · 78112 St. Georgen · Phone: +49 7724 81-0 · Fax: +49 7724 81-1309 · www.ebmpapst.com · info2@de.ebmpapst.com

# AC axial compact fan

## Charts: Air flow

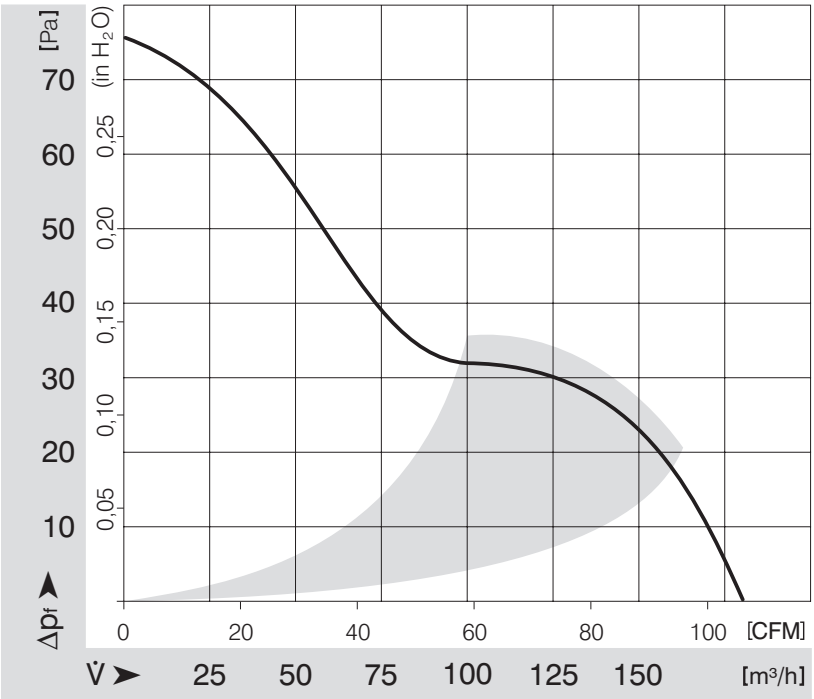




ebm-papst St. Georgen GmbH & Co. KG · Hermann-Papst-Straße 1 · 78112 St. Georgen · Phone: +49 7724 81-0 · Fax: +49 7724 81-1309 · www.ebmpapst.com · info2@de.ebmpapst.com