6058 ES

AC axial compact fan

ebm-papst St. Georgen GmbH & Co. KG
Hermann-Papst-Straße 1
D-78112 St. Georgen
Phone +49 7724 81-0
Fax +49 7724 81-1309
info2@de.ebmpapst.com
www.ebmpapst.com

Nominal data

Type	6058 ES	
Phase		1~
Nominal voltage	VAC	230
Frequency	Hz	50
Speed	min^{-1}	2800
Power input	W	24.0
Min. ambient temperature	°C	-25
Max. ambient temperature	°C	75
Air flow	m^3/h	375
Sound power level	B	5.9
Sound pressure level	dB(A)	55

ml = max. load · me = max. efficiency · rfa = running at free air · cs = customer specs · cu = customer unit
Subject to alterations

AC axial compact fan

Technical features

Dimensions	172 Ø x 51 mm
General description	AC voltage fan with external rotor capacitor motor. Protected from overload by integrated thermal switch. Fan housing and fan impeller made of metal. Air exhaust over bars. Direction of rotation counter-clockwise seen on rotor. Electrical connection to 2 flat plugs 2.8 x 0.5 mm. Fan housing with grounding lug for tapping screw M4 x 6 (TORX). Mass 1.0 kg. Please note our new ACmaxx series. With identical fastening dimensions and voltages, this series achieves higher energy efficiency.
Connection line	2 flat plugs 2.8 x 0.5 mm. Housing with grounding lug for tapping screw M4 x 6 (TORX).
Direction of rotation	Left, looking at rotor
Direction of air flow	Air exhaust over bars
Bearing	Ball bearings
Lifetime L10 at 40 °C	62000 h
Lifetime L10 at maximum temperature	31000 h
Mass	1 kg
Housing material	Metal
Material of impeller	Metal
Motor protection	Protected from overload by a thermal switch
Approval	VDE, CSA, UL, CE

ebm-papst St. Georgen GmbH & Co. KG · Hermann-Papst-Straße 1 · D-78112 St. Georgen · Phone +49 7724 81-0 · Fax +49 7724 81-1309 · info2@de.ebmpapst.com · www.ebmpapst.com

AC axial compact fan

Product drawing

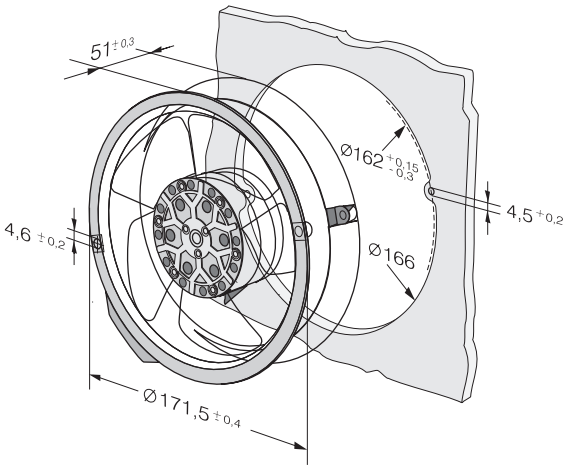

ebm-papst St. Georgen GmbH & Co. KG · Hermann-Papst-Straße 1 · D-78112 St. Georgen · Phone +49 7724 81-0 · Fax +49 7724 81-1309 · info2@de.ebmpapst.com · www.ebmpapst.com

AC axial compact fan

Charts: Air flow

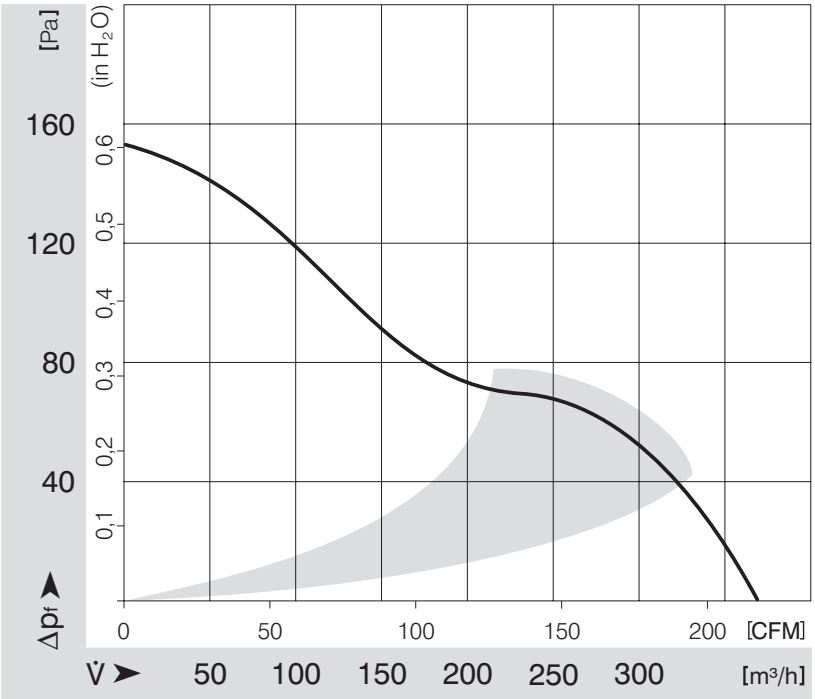

ebm-papst St. Georgen GmbH & Co. KG · Hermann-Papst-Straße 1 · D-78112 St. Georgen · Phone +49 7724 81-0 · Fax +49 7724 81-1309 · info2@de.ebmpapst.com · www.ebmpapst.com