605 F

# DC axial compact fan

**ebm-papst St. Georgen GmbH & Co. KG**
Hermann-Papst-Str. 1
D-78112 St. Georgen
Phone +49 (0) 7724 81-0
Fax +49 (0) 7724 81-1309

## Nominal data

| Type | 605 F | |
|---|---|---|
| Nominal voltage | VDC | 5 |
| Nominal voltage range | VDC | 4.5 .. 5.2 |
| Speed (rpm) | $min^{-1}$ | 4000 |
| Power consumption | W | 1.1 |
| Min. ambient temperature | °C | -20 |
| Max. ambient temperature | °C | 50 |
| Air flow | $m^3/h$ | 29 |
| Sound power level | B | 4.4 |
| Sound pressure level | dB(A) | 27 |

ml = Max. load · me = Max. efficiency · fa = Free air · cs = Customer specification · ce = Customer equipment
Subject to change

# DC axial compact fan

## Technical description

| | |
|---|---|
| **Weight** | 0.030 kg |
| **Dimensions** | 60 x 60 x 15 mm |
| **Impeller material** | Glass-fiber reinforced PA plastic |
| **Housing material** | Glass-fiber reinforced PBT plastic |
| **Airflow direction** | Exhaust over struts |
| **Direction of rotation** | Counterclockwise, viewed toward rotor |
| **Storage** | Sintec sleeve bearing |
| **Service life L10 at 20 °C** | 50000 h |
| **Service life L10 at 60 °C** | 20000 h |
| **Cable** | Leads AWG 28, TR 64, stripped and tin-plated. |
| **Motor protection** | Protection against reverse polarity and blocked rotor. |
| **Locked-rotor protection** | Impedance protection |
| **Approval** | VDE, CSA, UL, CE |
| **Option** | Possible custom designs:<br>Speed signal<br>Go / No-go alarm<br>PWM control input<br>Moisture protection |



orgen GmbH & Co. KG · Hermann-Papst-Str. 1 · D-78112 St. Georgen · Phone +49 (0) 7724 81-0 · Fax +49 (0) 7724 81-1309

# DC axial compact fan

## Product drawing

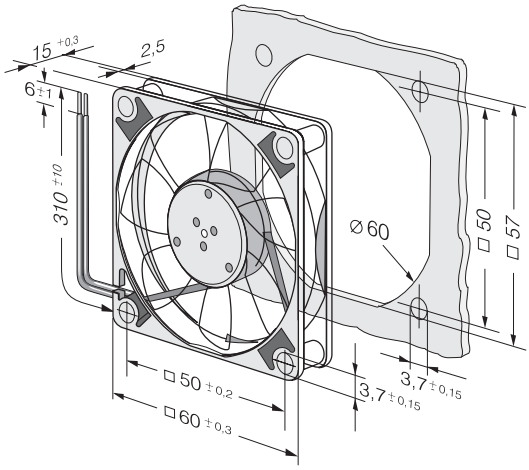




orgen GmbH & Co. KG · Hermann-Papst-Str. 1 · D-78112 St. Georgen · Phone +49 (0) 7724 81-0 · Fax +49 (0) 7724 81-1309

# DC axial compact fan

## Curves: Air performance

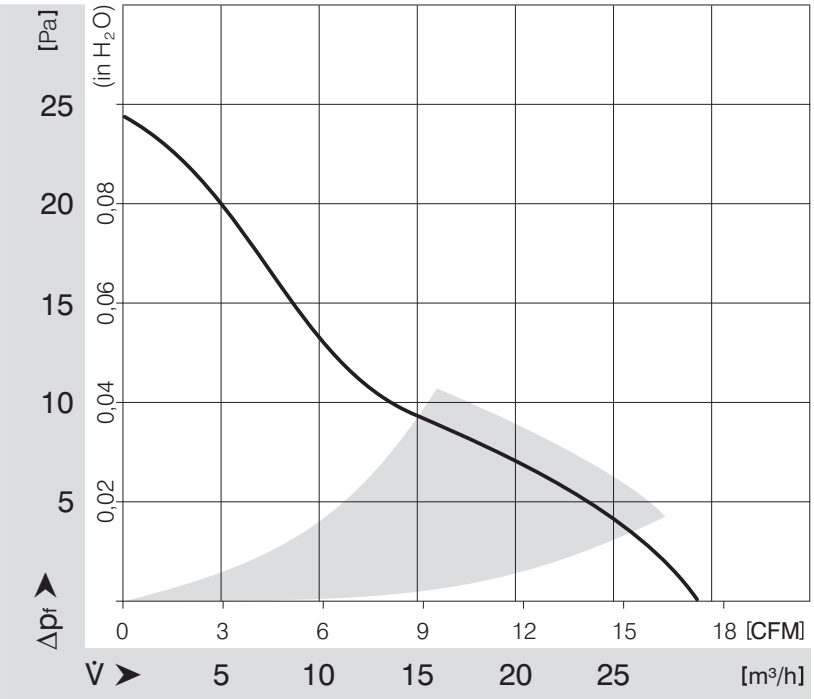




orgen GmbH & Co. KG · Hermann-Papst-Str. 1 · D-78112 St. Georgen · Phone +49 (0) 7724 81-0 · Fax +49 (0) 7724 81-1309