614 JH

DC axial compact fan

ebm-papst St. Georgen GmbH & Co. KG
Hermann-Papst-Straße 1
78112 St. Georgen
Phone: +49 7724 81-0
Fax: +49 7724 81-1309
www.ebmpapst.com
info2@de.ebmpapst.com

Nominal data

Type	614 JH	
Nominal voltage	[VDC]	24
Nominal voltage range	[VDC]	14 .. 26.4
Speed	[min^{-1}]	11700
Power input	[W]	7.7
Min. ambient temperature	[°C]	-20
Max. ambient temperature	[°C]	70
Air flow	[m^3/h]	70
Sound power level	[B]	6.4
Sound pressure level	[dB(A)]	53

ml = max. load · me = max. efficiency · rfa = running at free air · cs = customer specs · cu = customer unit
Subject to alterations

DC axial compact fan

Technical features

Dimensions	60 x 60 x 32 mm
General description	Rigid compression curve for high air flow at high counterpressure. Innovative impeller with winglets for low noise. Electronic commutation completely integrated.
Connection line	Single strands AWG 24, TR 64, bared and tin-plated.
Locked-rotor protection	With electronic blocking and overload protection
Direction of protection	Right, looking at rotor
Direction of air flow	Air exhaust over bars
Bearing	Ball bearings
Lifetime L10 at 40 °C	57500 h
Lifetime L10 at maximum temperature	27500 h
Mass	0.100 kg
Housing material	Fiberglass-reinforced PBT plastic
Material of impeller	Fiberglass-reinforced PA plastic
Motor protection	Protected against reverse polarity and locking.
Option	Speed signal
Approval	CE

ebm-papst St. Georgen GmbH & Co. KG · Hermann-Papst-Straße 1 · 78112 St. Georgen · Phone: +49 7724 81-0 · Fax: +49 7724 81-1309 · www.ebmpapst.com · info2@de.ebmpapst.com

DC axial compact fan

Product drawing

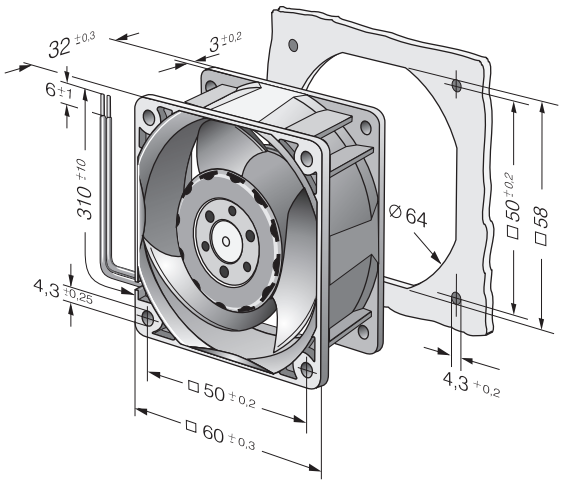

ebm-papst St. Georgen GmbH & Co. KG · Hermann-Papst-Straße 1 · 78112 St. Georgen · Phone: +49 7724 81-0 · Fax: +49 7724 81-1309 · www.ebmpapst.com · info2@de.ebmpapst.com

DC axial compact fan

Charts: Air flow

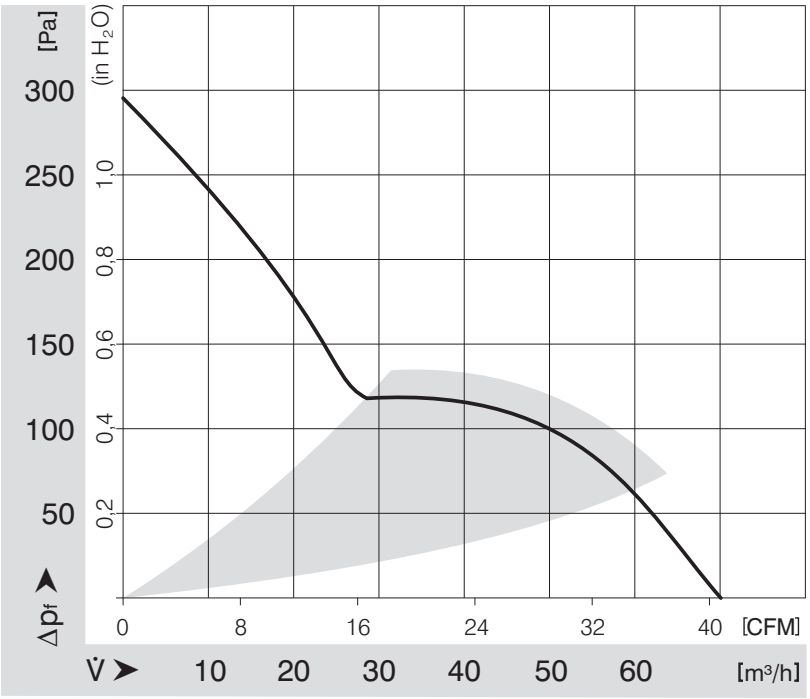

ebm-papst St. Georgen GmbH & Co. KG · Hermann-Papst-Straße 1 · 78112 St. Georgen · Phone: +49 7724 81-0 · Fax: +49 7724 81-1309 · www.ebmpapst.com · info2@de.ebmpapst.com