6318 /2 TDHP

DC axial compact fan

ebm-papst St. Georgen GmbH & Co. KG
Hermann-Papst-Straße 1
D-78112 St. Georgen
Phone +49 7724 81-0
Fax +49 7724 81-1309
info2@de.ebmpapst.com
www.ebmpapst.com

Nominal data

Type	6318 /2 TDHP	
Nominal voltage	VDC	48
Nominal voltage range	VDC	36 .. 72
Speed	min^{-1}	5500
Power input	W	40
Min. ambient temperature	°C	-20
Max. ambient temperature	°C	70
Air flow	m^3/h	600
Sound power level	B	7.3
Sound pressure level	dB(A)	60

ml = max. load · me = max. efficiency · rfa = running at free air · cs = customer specs · cu = customer unit
Subject to alterations

DC axial compact fan

Technical features

Dimensions	172 Ø x 51 mm
General description	Particular design features: Very smooth running 3-phase fan drive. Very rigid compression curve for high air flow at high counterpressure. Low operating noise level at high counterpressure. Standard with PWM control input and speed signal. Other inputs and outputs on request. General features: Housing made of aluminium, impeller made of fibreglass-reinforced PA; housing with grounding lug for M4 x 8 screw (Torx). Protected against reverse polarity and locking. Connection via single strands AWG 20, TR 64, bared and tin-plated. Air exhaust over bars. Direction of rotation counter-clockwise seen on rotor. Mass: 910 g.
Direction of rotation	Counterclockwise, looking at rotor
Direction of air flow	Air exhaust over bars
Lifetime L10 at 40 °C	75000 h
Lifetime L10 at maximum temperature	37500 h
Mass	0.910 kg
Housing material	Aluminum. Housing with grounding lug for screw M4 x 8 (TORX).
Material of impeller	Fiberglass-reinforced PA plastic
Motor protection	Protected against reverse polarity and locking.

ebm-papst St. Georgen GmbH & Co. KG · Hermann-Papst-Straße 1 · D-78112 St. Georgen · Phone +49 7724 81-0 · Fax +49 7724 81-1309 · info2@de.ebmpapst.com · www.ebmpapst.com

DC axial compact fan

Product drawing

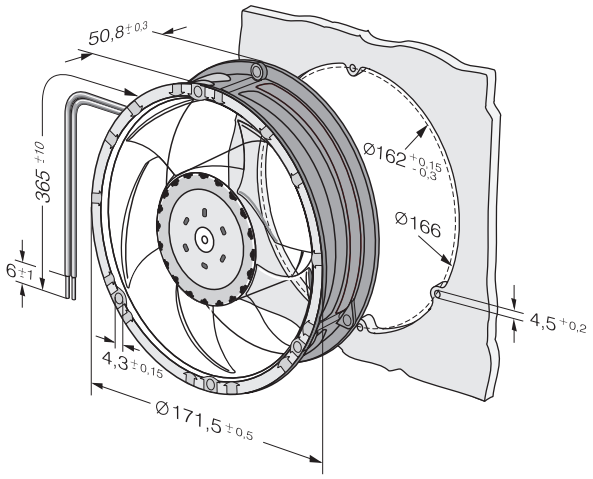

ebm-papst St. Georgen GmbH & Co. KG · Hermann-Papst-Straße 1 · D-78112 St. Georgen · Phone +49 7724 81-0 · Fax +49 7724 81-1309 · info2@de.ebmpapst.com · www.ebmpapst.com

DC axial compact fan

Charts: Air flow

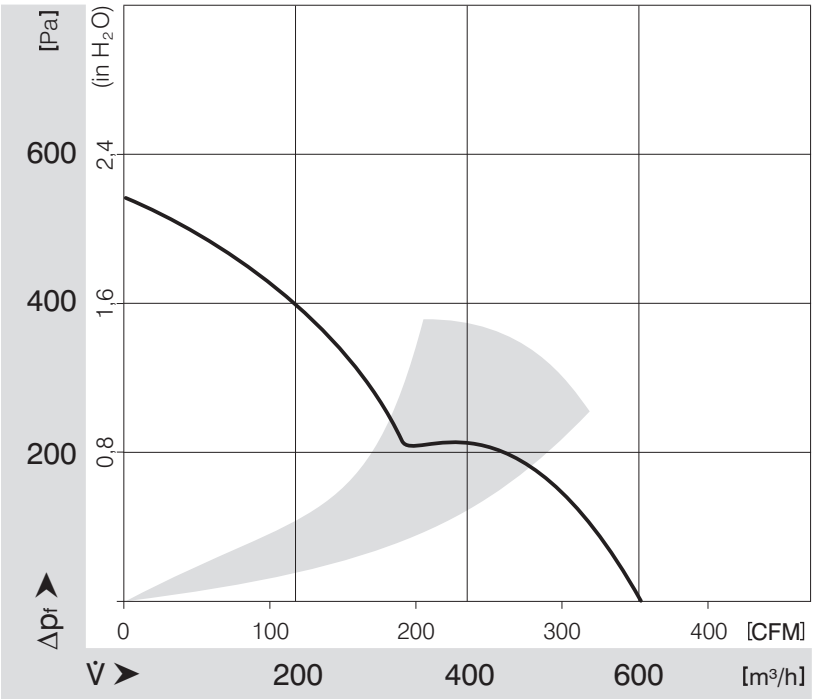

ebm-papst St. Georgen GmbH & Co. KG · Hermann-Papst-Straße 1 · D-78112 St. Georgen · Phone +49 7724 81-0 · Fax +49 7724 81-1309 · info2@de.ebmpapst.com · www.ebmpapst.com