6412 M

DC axial compact fan

ebm-papst St. Georgen GmbH & Co. KG
Hermann-Papst-Str. 1
D-78112 St. Georgen
Phone +49 (0) 7724 81-0
Fax +49 (0) 7724 81-1309

Nominal data

Type	6412 M	
Nominal voltage	VDC	12
Nominal voltage range	VDC	8 .. 15
Speed (rpm)	min^{-1}	2850
Power consumption	W	12.0
Min. ambient temperature	°C	-20
Max. ambient temperature	°C	72
Air flow	m^3/h	350
Sound power level	B	6.0
Sound pressure level	dB(A)	52

ml = Max. load · me = Max. efficiency · fa = Free air · cs = Customer specification · ce = Customer equipment
Subject to change

DC axial compact fan

Technical description

General description	Housing with grounding lug for M4 x 8 screw (Torx) Power consumption when wide open; these values may be considerably higher at the operating point.
Weight	0.760 kg
Dimensions	172 x 150 x 51 mm
Impeller material	Glass-fiber reinforced PA plastic
Housing material	Die-cast aluminum
Airflow direction	Exhaust over struts
Direction of rotation	Counterclockwise, viewed toward rotor
Storage	Ball bearing
Service life L10 at 40 °C	80000 h
Service life L10 at maximum temperature	37500 h
Cable	Flat plug 3.0 x 0.5 mm.
Motor protection	Protection against reverse polarity and blocked rotor.
Locked-rotor protection	Electronic locked-rotor protection, with electronic motor current limitation during startup and when rotor is locked.
Approval	VDE, CSA, UL, CE

orgen GmbH & Co. KG · Hermann-Papst-Str. 1 · D-78112 St. Georgen · Phone +49 (0) 7724 81-0 · Fax +49 (0) 7724 81-1309

DC axial compact fan

Product drawing

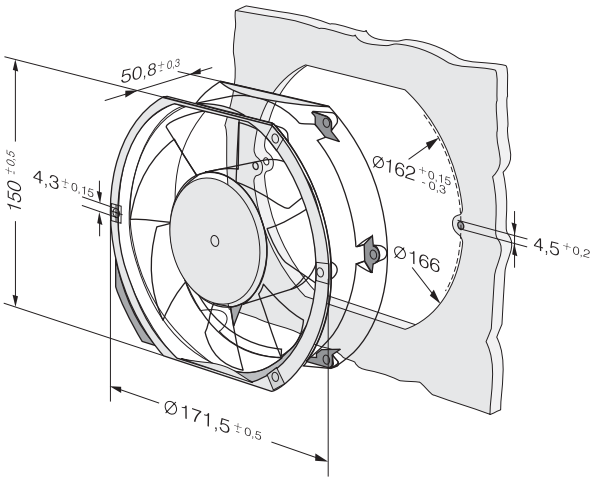

orgen GmbH & Co. KG · Hermann-Papst-Str. 1 · D-78112 St. Georgen · Phone +49 (0) 7724 81-0 · Fax +49 (0) 7724 81-1309

DC axial compact fan

Curves: Air performance

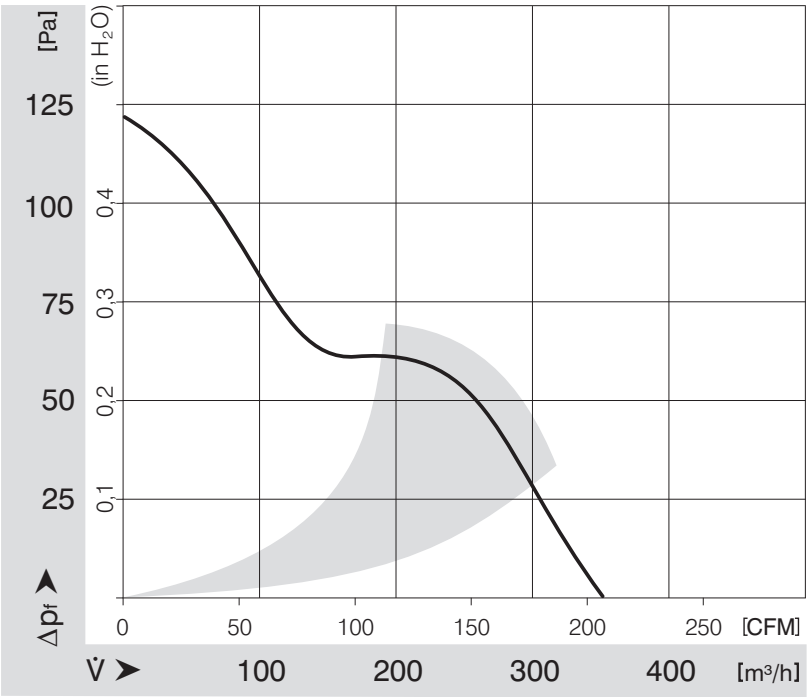

orgen GmbH & Co. KG · Hermann-Papst-Str. 1 · D-78112 St. Georgen · Phone +49 (0) 7724 81-0 · Fax +49 (0) 7724 81-1309