8300101553

VBS0355PTRLZ

EC centrifugal fan - RadiPac

backward-curved, single-intake

ebm-papst Mulfingen GmbH & Co. KG
Bachmühle 2 · D-74673 Mulfingen
Phone +49 7938 81-0
Fax +49 7938 81-110
info1@de.ebmpapst.com
www.ebmpapst.com

Limited partnership · Headquarters Mulfingen
Amtsgericht (court of registration) Stuttgart · HRA 590344

General partner Elektrobau Mulfingen GmbH · Headquarters Mulfingen
Amtsgericht (court of registration) Stuttgart · HRB 590142

Nominal data

Item	**8300101553**
Motor	**E11233-60**

Phase		3~
Nominal voltage	VAC	400
Nominal voltage range	VAC	380 .. 480
Frequency	Hz	50/60
Method of obtaining data		ml
Status		prelim.
Speed (rpm)	min^{-1}	2800
Power consumption	W	1900
Current draw	A	3.0
Min. ambient temperature	°C	-40
Max. ambient temperature	°C	65

ml = Max. load · me = Max. efficiency · fa = Free air · cs = Customer specification · ce = Customer equipment
Subject to change

Data according to Commission Regulation (EU) 327/2011 (prEN 17166)

		Actual	Req. 2015
01 Overall efficiency η_{es}	%	65.8	54.3
02 Measurement category		A	
03 Efficiency category		Static	
04 Efficiency grade N		73.5	62
05 Variable speed drive		Yes	

09 Power consumption P_{ed}	kW	1.86
09 Air flow q_v	m³/h	4470
09 Pressure increase p_{fs}	Pa	929
10 Speed (rpm) n	min^{-1}	2800
11 Specific ratio*		1.01

Data obtained at optimum efficiency level.

* Specific ratio = 1 + p_{fs} / 100 000 Pa

LU-232609

The efficiency values displayed for achieving conformity with the Ecodesign Regulation EU 327/2011 has been reached with defined air duct components (e.g. inlet rings).
The dimensions must be requested from ebm-papst. If other air conduction geometries are used on the installation side, the ebm-papst evaluation loses its validity/the conformity must be confirmed again.

The product does not fall within the scope of Regulation (EU) 2019/1781 due to the exception specified in Article 2 (2a) (motors completely integrated into a product).

Technical description

Size	355 mm
Motor size	112
Rotor surface	Painted black
Electronics housing material	Die-cast aluminum
Impeller material	Sheet aluminum
Number of blades	5
Direction of rotation	Clockwise, viewed toward rotor
Degree of protection	IP55
Insulation class	"F"
Moisture (F) / Environmental (H) protection class	H1
Ambient temperature note	Occasional start-up at temperatures between -40°C and -25°C is permitted. For continuous operation at ambient temperatures below -25°C (such as refrigeration applications), use must be made of a fan design with special low-temperature bearings.
Max. permitted ambient temp. for motor (transport/storage)	+80 °C
Min. permitted ambient temp. for motor (transport/storage)	-40 °C
Installation position	Shaft horizontal or rotor on bottom; rotor on top on request
Condensation drainage holes	On rotor side
Mode	S1
Motor bearing	Ball bearing
Technical features	- Operation and alarm display with LED - External 15-50 VDC input (parameterization) - Alarm relay - Integrated PI controller - Configurable inputs/outputs (I/O) - MODBUS V6.3 - Motor current limitation - RS-485 MODBUS-RTU - Soft start - Voltage output 3.3-24 VDC, Pmax = 800 mW - Control interface with SELV potential safely disconnected from the mains - Thermal overload protection for electronics/motor - Line undervoltage / phase failure detection
EMC immunity to interference	According to EN 61000-6-2 (industrial environment)
EMC interference emission	According to EN 61000-6-3 (household environment), except EN 61000-3-2 for professionally used equipment with a total rated power greater than 1 kW
Touch current according to IEC 60990 (measuring circuit Fig. 4, TN system)	<= 3.5 mA
Electrical hookup	Terminal box
Motor protection	Electronic motor protection
Protection class assignment	I; If a protective earth is connected by the customer This component for installation may have several local protection classes. This information relates to this component's basic design. The final protection class is based on the component's intended installation and connection.
Conformity with standards	EN 61800-5-1; CE
Approval	EAC; UL 1004-7 + 60730-1

ebm-papst Mulfingen GmbH & Co. KG · Bachmühle 2 · D-74673 Mulfingen · Phone +49 (0) 7938 81-0 · Fax +49 (0) 7938 81-110 · info1@de.ebmpapst.com · www.ebmpapst.com

EC centrifugal fan - RadiPac

backward-curved, single-intake

Product drawing

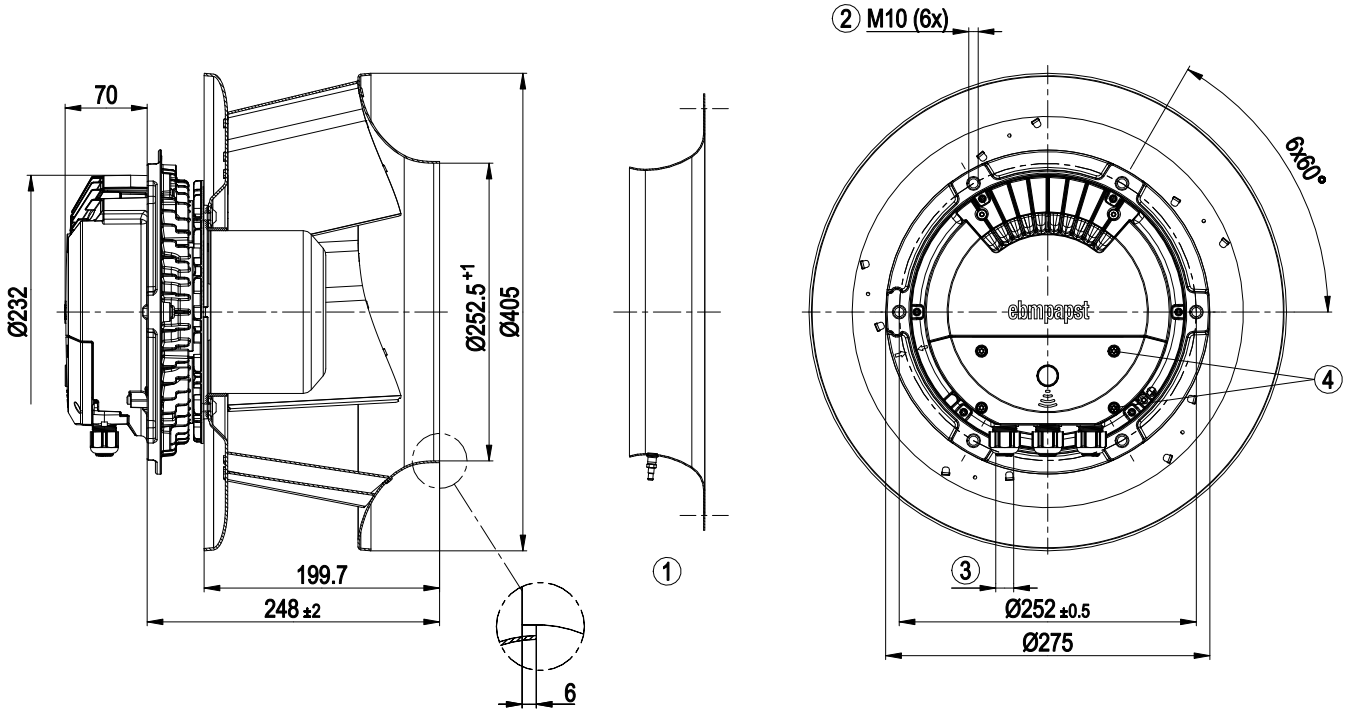

1	Accessory part: Inlet ring 35675-2-4013 with pressure tap (k-factor: 148) not included in scope of delivery
2	Max. clearance for screw 20 mm
3	Cable diameter min. 4 mm, max. 10 mm, tightening torque 4 ± 0.6 Nm
	(The tightening torque is designed for PVC cables. If the cable materials are different, the tightening torque may have to be adjusted)
4	Tightening torque 1.5 ± 0.2 Nm

ebm-papst Mulfingen GmbH & Co. KG · Bachmühle 2 · D-74673 Mulfingen · Phone +49 (0) 7938 81-0 · Fax +49 (0) 7938 81-110 · info1@de.ebmpapst.com · www.ebmpapst.com

Accessory part

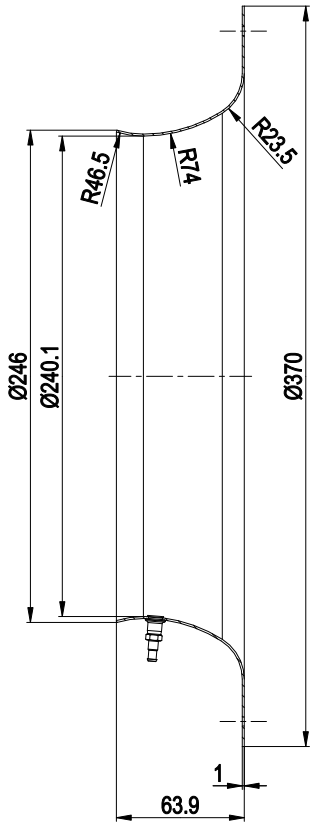

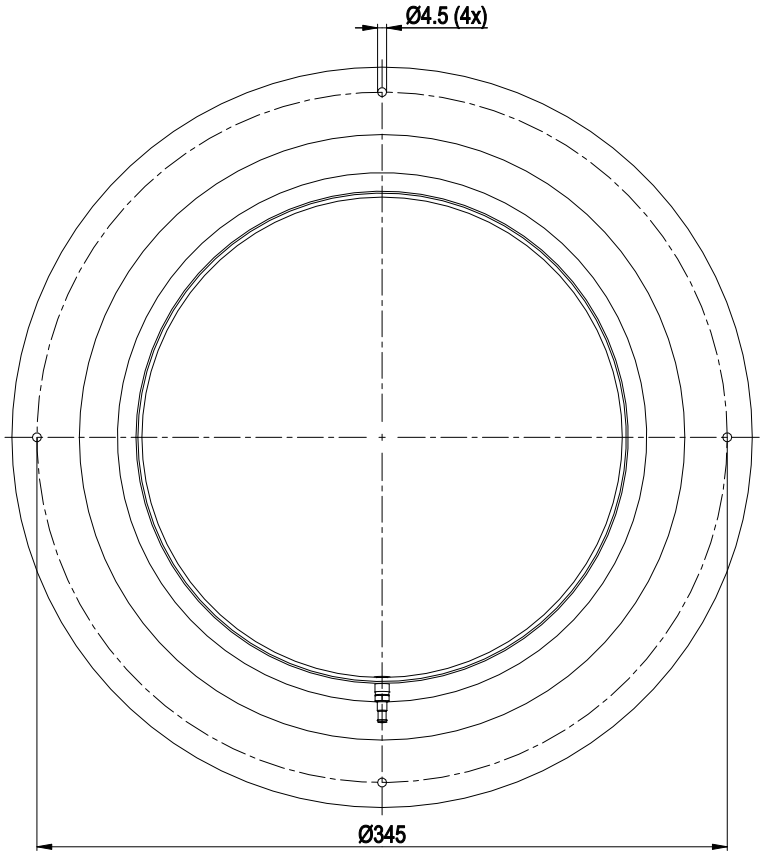

Inlet ring 35675-2-4013 with pressure tap (k-factor: 148)

ebm-papst Mulfingen GmbH & Co. KG · Bachmühle 2 · D-74673 Mulfingen · Phone +49 (0) 7938 81-0 · Fax +49 (0) 7938 81-110 · info1@de.ebmpapst.com · www.ebmpapst.com

Connection diagram

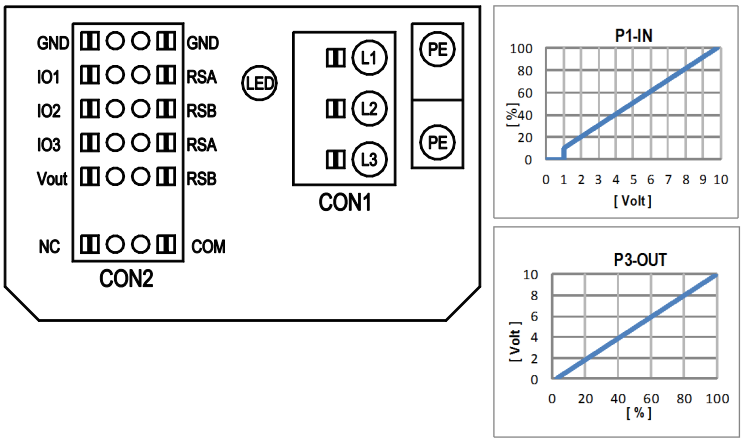

No.	Conn.	Designation	Function/assignment
	CON1	L1, L2, L3	Power supply, phase, see nameplate for voltage range
	PE	PE	Protective earth
	CON2	RSA	RS485 interface for MODBUS, RSA; SELV
	CON2	RSB	RS485 interface for MODBUS, RSB; SELV
	CON2	GND	Reference ground for control interface, SELV
	CON2	IO1	Function parameterizable (see “Optional interface functions” table) Factory setting: Digital input - high active, function: Disable input, SELV - inactive: Pin open or applied voltage < 1.5 VDC - active: applied voltage 3.5-50 VDC Reset function: Triggering of error reset on change of state from "enabled" to "disabled"
	CON2	IO2	Function parameterizable (see “Optional interface functions” table) Factory setting: Analog input 0-10 V/PWM, Ri=100 kΩ, function: Set value Characteristic curve parameterizable (see input characteristic curve P1-IN), SELV
	CON2	IO3	Function parameterizable (see “Optional interface functions” table) Factory setting: Analog output 0-10 V, max. 5 mA, function: Actual speed Characteristic curve parametrizable (see output characteristic curve P3-OUT), SELV
	CON2	Vout	Voltage output 3.3-24 VDC ±5%, Pmax=800 mW, voltage parameterizable Factory setting: 10 VDC short-circuit-proof, supply for external devices, SELV alternatively: 15-50 VDC input for parameterization via MODBUS without line voltage
	CON2	COM	Status relay, floating status contact, common connection, contact rating 250 VAC / 2 A (AC1) / min. 10 mA, reinforced insulation on supply side and on control interface side
	CON2	NC	Status relay, floating status contact, break for failure
		LED	green: status = good, ready for operation orange: status = warning red: status = failure
		P1-IN	Input characteristic curve
		P3-OUT	Output characteristic curve

ebm-papst Mulfingen GmbH & Co. KG · Bachmühle 2 · D-74673 Mulfingen · Phone +49 (0) 7938 81-0 · Fax +49 (0) 7938 81-110 · info1@de.ebmpapst.com · www.ebmpapst.com

Terminal/plug assignment

CON2	configurable IO mode	electrical specification	MODBUS Register for IO mode configuration	configurable IO functions: normal / inverse	INPUT: switch: control function: heating (pos.) / cooling (neg.) D12E [...]	INPUT: switch: direction of rotation: cw / ccw D148 [...]	INPUT: switch: set value source D16C [...]	INPUT: switch: fan enable / disable D16A [...]	INPUT: source: set value D101 [...]	INPUT: source: sensor value D147 [...]	INPUT: switch: parameter set: #1 / #2 D104 [...]	OUTPUT: signal: fan modulation level % D130 [0]	OUTPUT: signal: actual speed D130 [1]	OUTPUT: signal: system modulation level % D130 [2]	OUTPUT: signal: remote control output 0-10V D130 [5]	OUTPUT: pulse input for auto-adressing D00C [1]	OUTPUT: pulse output for auto-adressing D130 [4]	OUTPUT: signal: diagnostics out (selected directly via IO mode)	OUTPUT: signal: tach out (selected directly via IO mode)
IO1	○ **Din1 (active high)**: digital input	active: applied voltage 3,5-50VDC, SELV not active: pin open or applied voltage < 1,5VDC	D158 [0]		○	○	○	○			○	○	○	○	○				
IO1	○ **Ain1 0-10V/PWM**: analog input	Ri = 100K, characteristic curve parameterizable, f_{PWM} = 1k..10KHz, SELV	D158 [2]						○	○									
IO1	○ **Tach out** (open collector output)	Umax = 50VDC, Imax = 20mA, SELV	D158 [5]																○
IO1	○ **Diagnostics out** (open collector output)	Umax = 50VDC, Imax = 20mA, SELV	D158 [6]															○	
IO2	○ **Din2 (active high)**: digital input	active: applied voltage 3,5-50VDC, SELV not active: pin open or applied voltage < 1,5VDC	D159 [0]		○	○	○	○			○								
IO2	○ **Ain2 0-10V/PWM**: analog input	Ri = 100K, characteristic curve parameterizable, f_{PWM} = 1k..10KHz, SELV	D159 [2]							○									
IO2	○ **Ain2 4-20mA**: analog input	Ri = 125R, characteristic curve parameterizable, SELV	D159 [3]							○									
IO3	○ **Din3 (active high)**: digital input	active: applied voltage 3,5-50VDC, SELV not active: pin open or applied voltage < 1,5VDC	D15A [0]		○	○	○	○			○								
IO3	○ **Din3 (active low)**: digital input	active: applied voltage < 1,5VDC, SELV not active: pin open or applied voltage 3,5-50VDC	D15A [1]																
IO3	○ **PWMin3**: digital input, idle level high	PWM = 40Hz - 10kHz, characteristics parameterizable active: pin open or applied voltage 3,5-50VDC not active: applied voltage < 1,5VDC, SELV	D15A [7]						○										
IO3	○ **PWMin3**: digital input, idle level low	40Hz - 10kHz, characteristics parameterizable active: applied voltage 3,5-50VDC not active: pin open or applied voltage < 1,5VDC, SELV	D15A[8]						○										
IO3	○ **Aout3 0-10V**: analog output	function parameterizable, max. 5mA, max output frequency 300Hz, SELV	D15A[4]												○		○		
IO3	○ **Tacho out** (pulses), analog output	0-10V max. 5mA, max output frequency 300Hz, SELV	D15A[5]																○
IO3	○ **Diagnostics out** (pulses)	0-10V max. 5mA, max output frequency 300Hz, SELV	D15A[6]															○	
RSA RSB	RS485 bus connection,	MODBUS RTU, specification V6.3, SELV		○															
Vout	voltage output	voltage parameterizable 3,3...24VDC +/- 5%, Pmax=800mW, short-circuit-proof, supply for external devices, SELV	D16E [...]																
	alternatively: Input auxillary power supply for parameterization via RS485/MODBUS RTU without line voltage	15...50VDC																	

○ configurable option

For further information and additional functions see EC Control Software, Fan-Set-App, or MODBUS Parameter Specification V6.3

ebm-papst Mulfingen GmbH & Co. KG · Bachmühle 2 · D-74673 Mulfingen · Phone +49 (0) 7938 81-0 · Fax +49 (0) 7938 81-110 · info1@de.ebmpapst.com · www.ebmpapst.com

8300101553

VBS0355PTRLZ

EC centrifugal fan - RadiPac

backward-curved, single-intake

Curves: Air performance 50 Hz

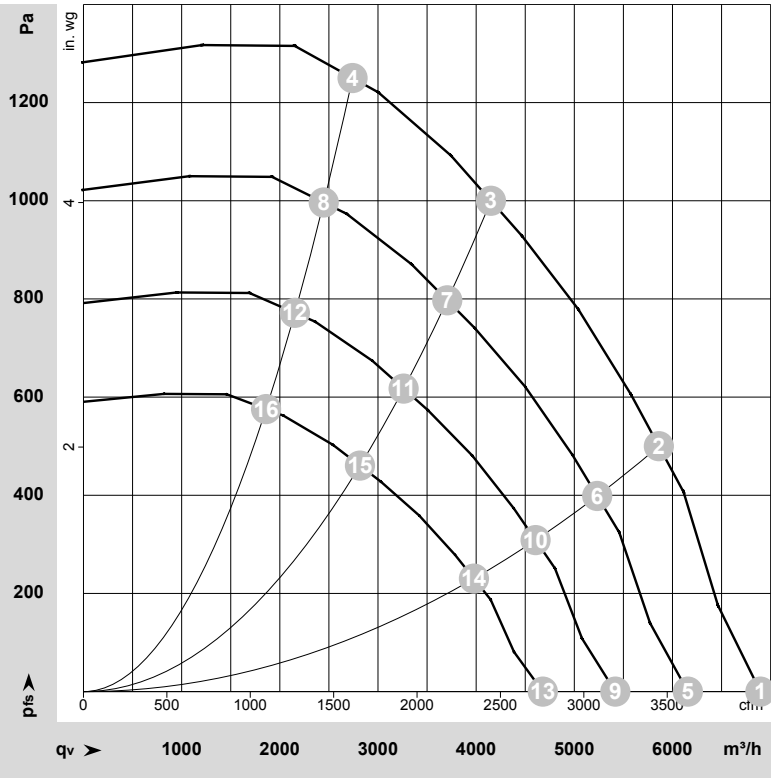

ρ = 1.15 kg/m³ ± 2 %

Measurement: LU-232609-1
Date: 2020-03-24
Nozzle: 35670-2-4013

Air performance measured according to ISO 5801 installation category A. For detailed information on the measurement setup, contact ebm-papst. Intake sound level: Sound power level according to ISO 13347 / sound pressure level measured at 1 m distance from fan axis. The values given are valid under the specified measuring conditions and may vary due to conditions of installation. For deviations from the standard configuration, the parameters have to be checked on the installed unit.

Measured values

	Wired	U	f	n	P_e	I	LpA_{in}	LwA_{in}	LwA_{out}	LwA	q_V	p_{fs}	q_V	p_{fs}
		V	Hz	min^{-1}	W	A	dB(A)	dB(A)	dB(A)	dB	m^3/h	Pa	cfm	in. wg
1	3~	400	50	2800	1148	1.81	89	96	97	99	6895	0	4060	0.00
2	3~	400	50	2800	1587	2.45	79	86	91	92	5860	500	3450	2.01
3	3~	400	50	2800	1864	2.85	73	81	87	88	4150	1000	2445	4.01
4	3~	400	50	2800	1736	2.67	75	84	89	90	2740	1250	1615	5.02
5	3~	400	50	2500	817	1.29	86	93	94	96	6155	0	3625	0.00
6	3~	400	50	2500	1130	1.74	76	84	88	89	5235	399	3080	1.60
7	3~	400	50	2500	1327	2.03	70	78	84	85	3705	797	2180	3.20
8	3~	400	50	2500	1235	1.90	73	81	86	87	2445	996	1440	4.00
9	3~	400	50	2200	557	0.88	83	90	91	93	5420	0	3190	0.00
10	3~	400	50	2200	770	1.19	73	80	84	86	4605	309	2710	1.24
11	3~	400	50	2200	904	1.38	67	75	81	82	3260	617	1920	2.48
12	3~	400	50	2200	842	1.30	69	78	83	84	2155	772	1270	3.10
13	3~	400	50	1900	359	0.56	79	86	87	90	4680	0	2755	0.00
14	3~	400	50	1900	496	0.76	69	77	81	82	3975	230	2340	0.92
15	3~	400	50	1900	582	0.89	63	71	78	78	2815	460	1655	1.85
16	3~	400	50	1900	542	0.83	66	74	79	81	1860	576	1095	2.31

Wired = Wiring · U = Voltage · f = Frequency · n = Speed (rpm) · P_e = Power consumption · I = Current draw · LpA_{in} = Sound pressure level intake side · LwA_{in} = Sound power level intake side
LwA_{out} = Sound power level outlet side · q_V = Air flow · p_{fs} = Pressure increase

ebm-papst Mulfingen GmbH & Co. KG · Bachmühle 2 · D-74673 Mulfingen · Phone +49 (0) 7938 81-0 · Fax +49 (0) 7938 81-110 · info1@de.ebmpapst.com · www.ebmpapst.com