# DC axial fan

## Series 8400 N 80 x 80 x 25

- **General description:** DC fan with electronically commutated external rotor motor. Commutation electronics completely integrated.
- **Impeller material:** Fiberglass-reinforced PA plastic
- **Housing material:** Fiberglass-reinforced PBTP plastic

| Nominal data | | Voltage | Voltage range VDC | Air flow | Speed | Power consumption | Sound level | Sound pressure level | Ambient temperature | L10 service life at 40 °C | L10 service life at max. temp. | Weight |
|---|---|---|---|---|---|---|---|---|---|---|---|---|
| **Type** | **Motor** | **VDC** | **VDC** | **m³/h** | **1/min** | **W** | **Bel** | **dB(A)** | **°C** | **h** | **h** | **kg** |
| **8412 NH** | -- | 12 | 8 - 13.2 | 79 | 3600 | 2.2 | 5.0 | 37 | -20 .. 70 | 70000 | 35000 | 0.095 |

Subject to modification

## Characteristic: Pressure over air flow

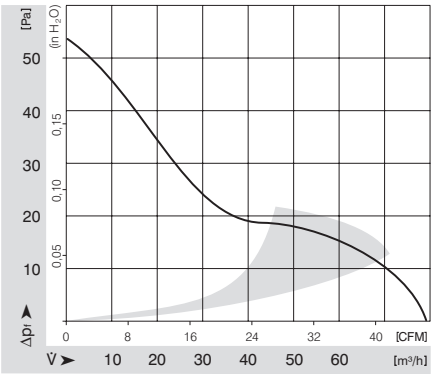




ebmpapst

# DC axial fan

Series 8400 N 80 x 80 x 25

## Specific drawing

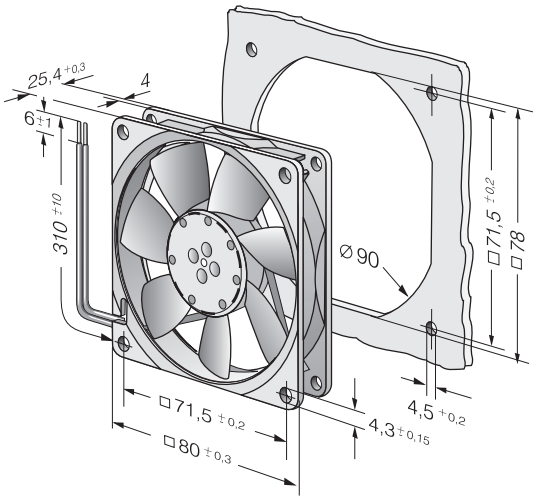


## Technical description

- **General description:** DC fan with electronically commutated external rotor motor. Commutation electronics completely integrated.
- **Housing material:** Fiberglass-reinforced PBTP plastic
- **Direction of rotation:** Left, looking at rotor
- **Electrical connection:** Single strands AWG 24, TR 64
- **Locked-rotor protection:** Locked-rotor and overload protection
- **Option:** Speed signal, Vario-Pro
- **Impeller material:** Fiberglass-reinforced PA plastic
- **Bearings:** Ball bearings
- **Direction of air flow:** Air exhaust over bars
- **Motor protection:** Reverse-polarity protected. The fan runs only if the polarity is correct.
- **Approvals:** VDE, CSA, UL, CE

## Contact

**ebm-papst St. Georgen GmbH & Co. KG**
Hermann-Papst-Straße 1
D-78112 St. Georgen
Phone +49 (0) 7724 / 81-0
Fax +49 (0) 7724 / 81-1309
info2@de.ebmpapst.com
www.ebmpapst.com