8550 N

AC axial panel compact fan

ebm-papst St. Georgen GmbH & Co. KG
Hermann-Papst-Str. 1
D-78112 St. Georgen
Phone +49 (0) 7724 81-0
info2@de.ebmpapst.com
www.ebmpapst.com

Nominal data

Item	**8550 N**
Motor	**-0**

Phase		1~
Nominal voltage	VAC	230
Frequency	Hz	50
Speed (rpm)	min^{-1}	2700
Power consumption	W	12.0
Min. ambient temperature	°C	-10
Max. ambient temperature	°C	70
Air flow	m^3/h	50
Sound power level	B	4.4
Sound pressure level	dB(A)	30

ml = Max. load · me = Max. efficiency · fa = Free air · cs = Customer specification · ce = Customer equipment
Subject to change

AC axial panel compact fan

Technical description

Weight	0.490 kg
Dimensions	80 x 80 x 38 mm
Impeller material	Sheet steel, painted black
Housing material	Die-cast aluminum
Airflow direction	Exhaust over struts
Service life L10 at 40 °C	52500 h
Service life L10 at maximum temperature	25000 h

ebm-papst St. Georgen GmbH & Co. KG · Hermann-Papst-Str. 1 · D-78112 St. Georgen · Phone +49 (0) 7724 81-0 · info2@de.ebmpapst.com · www.ebmpapst.com

AC axial panel compact fan

Product drawing

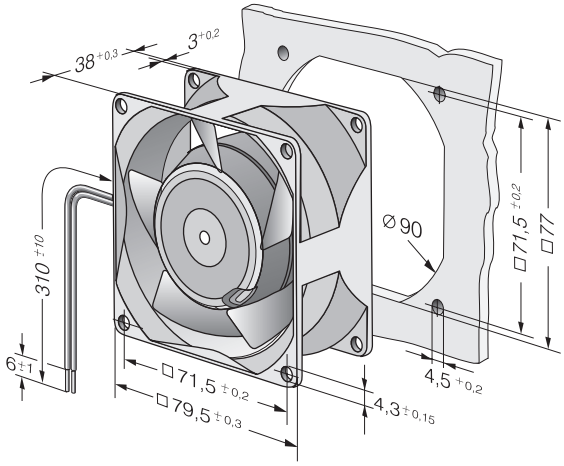

ebm-papst St. Georgen GmbH & Co. KG · Hermann-Papst-Str. 1 · D-78112 St. Georgen · Phone +49 (0) 7724 81-0 · info2@de.ebmpapst.com · www.ebmpapst.com

AC axial panel compact fan

Curves: Air performance

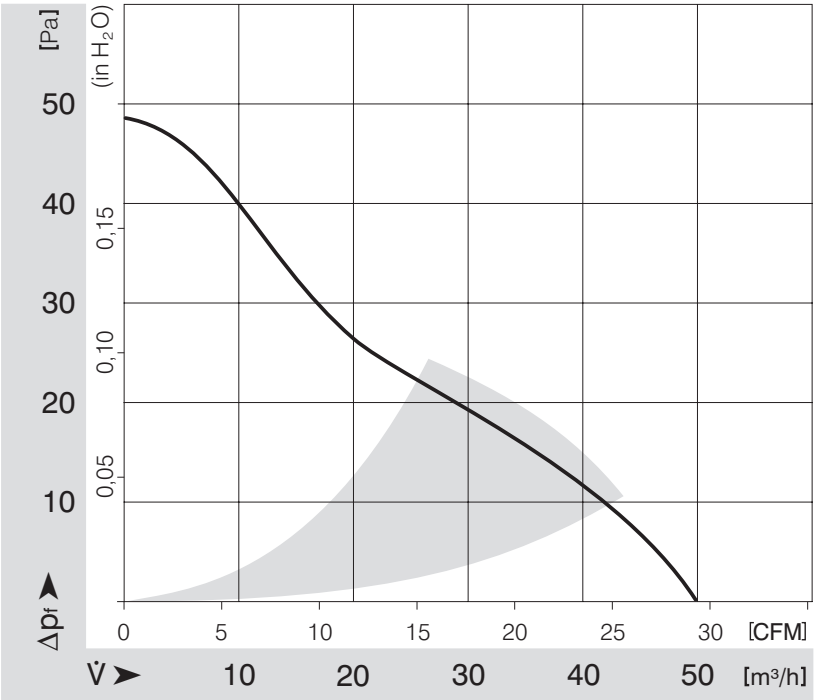

ebm-papst St. Georgen GmbH & Co. KG · Hermann-Papst-Str. 1 · D-78112 St. Georgen · Phone +49 (0) 7724 81-0 · info2@de.ebmpapst.com · www.ebmpapst.com