A2E250-AL06-11

AC axial fan

sickle-shaped blades (S series)

ebm-papst Mulfingen GmbH & Co. KG
Bachmühle 2 · D-74673 Mulfingen
Phone +49 7938 81-0
Fax +49 7938 81-110
info1@de.ebmpapst.com
www.ebmpapst.com

Nominal data

Type	**A2E250-AL06-11**
Motor	**M2E068-CF**

Phase		1~	1~	1~
Nominal voltage	VAC	230	230	230
Frequency	Hz	50	60	60
Method of obtaining data		fa	fa	fa
Valid for approval/standard		CE	CE	UL 2111
Speed (rpm)	min^{-1}	2450	2600	2600
Power consumption	W	115	150	165
Current draw	A	0.51	0.66	0.70
Capacitor	µF	3	3	3
Capacitor voltage	VDB	400	400	400
Capacitor standard		S0 (CE)	S0 (CE)	UL
Max. back pressure	Pa	120	85	85
Max. back pressure	in. wg	0.48	0.34	0.34
Max. ambient temperature	°C	65	50	50
Starting current	A	0.88	0.87	

ml = Max. load · me = Max. efficiency · fa = Free air · cs = Customer specification · ce = Customer equipment
Subject to change

AC axial fan

sickle-shaped blades (S series)

Technical description

Weight	1.8 kg
Size	250 mm
Motor size	68
Rotor surface	Painted black
Blade material	Sheet steel, painted black
Number of blades	7
Airflow direction	V
Direction of rotation	Counterclockwise, viewed toward rotor
Degree of protection	IP44; installation- and position-dependent as per EN 60034-5
Insulation class	"B"
Moisture (F) / Environmental (H) protection class	H1
Max. permitted ambient temp. for motor (transport/storage)	+ 80 °C
Min. permitted ambient temp. for motor (transport/storage)	- 40 °C
Installation position	Shaft horizontal or rotor on bottom; rotor on top on request
Condensation drainage holes	On rotor side
Mode	S1
Motor bearing	Ball bearing
Touch current according to IEC 60990 (measuring circuit Fig. 4, TN system)	< 0.75 mA
Motor protection	Thermal overload protector (TOP) internally connected
With cable	Variable
Conformity with standards	EN 60034-1; EN 60204-1; EN 60335-1; CE
Approval	UL 1004-3; CSA C22.2 No. 77

ebmpapst

AC axial fan

sickle-shaped blades (S series)

Product drawing

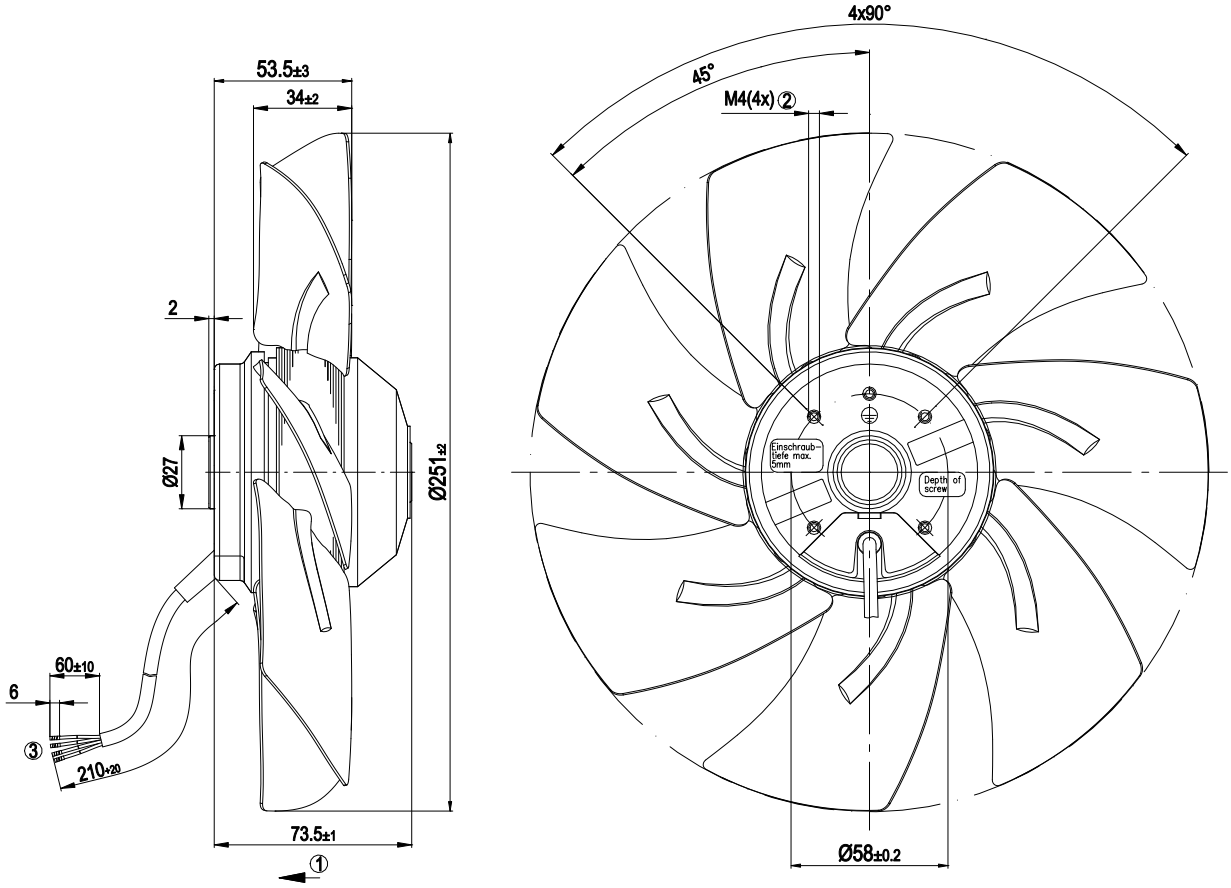

1	Airflow direction "V"
2	Max. clearance for screw 5 mm
3	Cable PVC AWG20
	4x splice

AC axial fan

sickle-shaped blades (S series)

Connection diagram

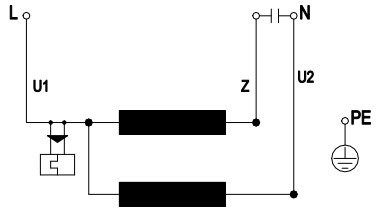

U1	blue	Z	brown	U2	black
PE	green/yellow				

ebmpapst

A2E250-AL06-11

AC axial fan

sickle-shaped blades (S series)

Curves: Air performance 50 Hz

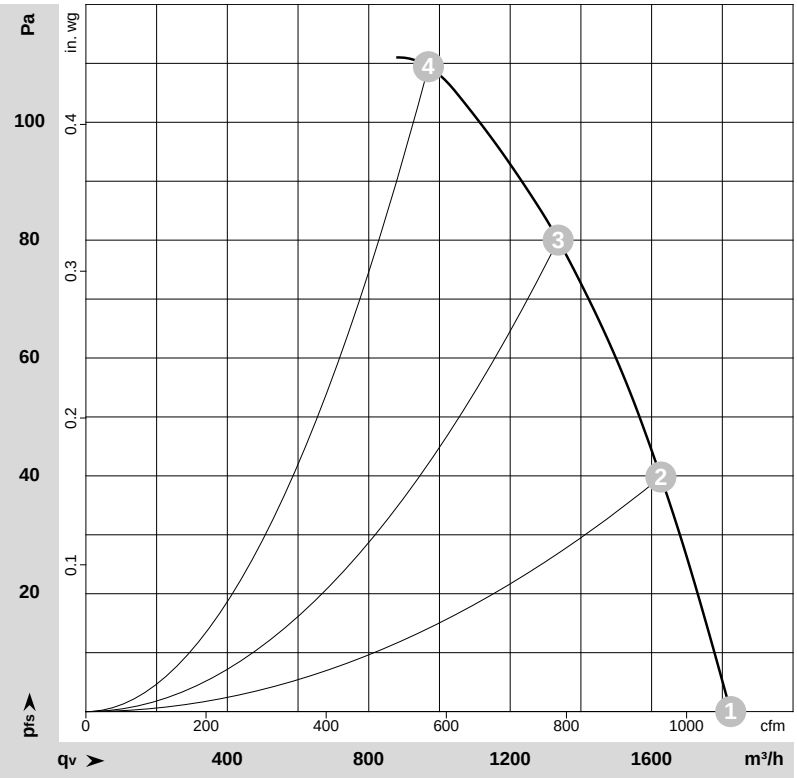

ρ = 1.15 kg/m³ ± 2 %

Measurement: LU-59608-1

Air performance measured according to ISO 5801 installation category A. For detailed information on the measurement setup, contact ebm-papst. Intake sound level: Sound power level according to ISO 13347 / sound pressure level measured at 1 m distance from fan axis. The values given are valid under the specified measuring conditions and may vary due to conditions of installation. For deviations from the standard configuration, the parameters have to be checked on the installed unit.

Measured values

	Wired	U	f	n	P_e	I	q_V	p_{fs}	q_V	p_{fs}
		V	Hz	min^{-1}	W	A	m^3/h	Pa	cfm	in. wg
1	1~	230	50	2450	115	0.51	1825	0	1075	0.00
2	1~	230	50	2415	121	0.52	1625	40	955	0.16
3	1~	230	50	2320	129	0.56	1335	80	785	0.32
4	1~	230	50	2265	134	0.58	970	110	570	0.44

Wired = Wiring · U = Voltage · f = Frequency · n = Speed (rpm) · P_e = Power consumption · I = Current draw · q_V = Air flow · p_{fs} = Pressure increase

ebmpapst

AC axial fan

sickle-shaped blades (S series)

Curves: Air performance 60 Hz

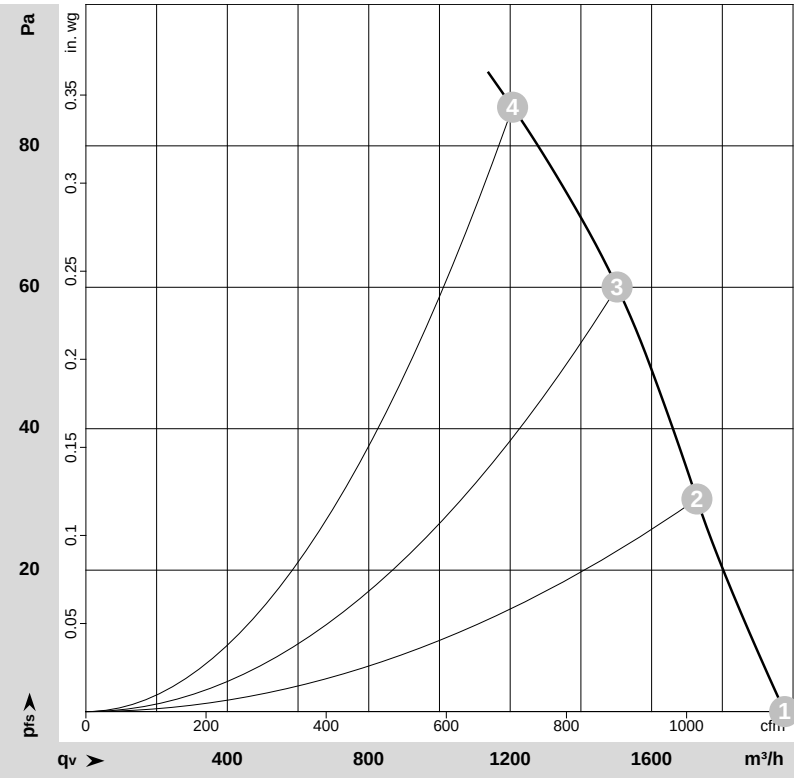

ρ = 1.15 kg/m³ ± 2 %

Measurement: LU-59609-1

Air performance measured according to ISO 5801 installation category A. For detailed information on the measurement setup, contact ebm-papst. Intake sound level: Sound power level according to ISO 13347 / sound pressure level measured at 1 m distance from fan axis. The values given are valid under the specified measuring conditions and may vary due to conditions of installation. For deviations from the standard configuration, the parameters have to be checked on the installed unit.

Measured values

	Wired	U	f	n	P_e	I	q_V	p_{fs}	q_V	p_{fs}
		V	Hz	min^{-1}	W	A	m^3/h	Pa	cfm	in. wg
1	1~	230	60	2600	150	0.66	1975	0	1165	0.00
2	1~	230	60	2520	156	0.68	1730	30	1015	0.12
3	1~	230	60	2405	160	0.70	1500	60	885	0.24
4	1~	230	60	2285	164	0.72	1205	85	710	0.34

Wired = Wiring · U = Voltage · f = Frequency · n = Speed (rpm) · P_e = Power consumption · I = Current draw · q_V = Air flow · p_{fs} = Pressure increase

ebmpapst