G2S097-FF06-15

AC centrifugal fan

forward-curved, single-intake
with housing (without flange)

ebm-papst Mulfingen GmbH & Co. KG
Bachmühle 2 · D-74673 Mulfingen
Phone +49 7938 81-0
Fax +49 7938 81-110
info1@de.ebmpapst.com
www.ebmpapst.com

Limited partnership · Headquarters Mulfingen
Amtsgericht (court of registration) Stuttgart · HRA 590344

General partner Elektrobau Mulfingen GmbH · Headquarters Mulfingen
Amtsgericht (court of registration) Stuttgart · HRB 590142

Nominal data

Type	**G2S097-FF06-15**
Motor	**M2S052-CA**

Phase		1~
Nominal voltage	VAC	230
Frequency	Hz	50
Method of obtaining data		fa
Valid for approval/standard		CE
Speed (rpm)	min^{-1}	2100
Power consumption	W	45
Current draw	A	0.26
Min. back pressure	Pa	0
Min. back pressure	inH2O	0
Min. ambient temperature	°C	-25
Max. ambient temperature	°C	65

ml = Max. load · me = Max. efficiency · fa = Free air · cs = Customer specification · ce = Customer equipment
Subject to change

AC centrifugal fan

forward-curved, single-intake
with housing (without flange)

Technical description

Weight	1 kg
Fan size	97 mm
Rotor surface	Painted black
Impeller material	Sheet aluminum
Housing material	Sheet aluminum
Motor suspension	Motor mounted on support plate for one-sided vibration damping
Direction of rotation	Counterclockwise, viewed toward rotor
Degree of protection	IP20
Insulation class	"F"
Max. permitted ambient temp. for motor (transport/storage)	+ 80 °C
Min. permitted ambient temp. for motor (transport/storage)	- 40 °C
Installation position	Any
Condensation drainage holes	None, open rotor
Mode	S1
Motor bearing	Ball bearing
Touch current according to IEC 60990 (measuring circuit Fig. 4, TN system)	< 0.75 mA
Motor protection	Thermal overload protector (TOP) internally connected
Protection class	I (with customer connection of protective earth)
Conformity with standards	EN 60335-1; CE

ebm-papst Mulfingen GmbH & Co. KG · Bachmühle 2 · D-74673 Mulfingen · Phone +49 (0) 7938 81-0 · Fax +49 (0) 7938 81-110 · info1@de.ebmpapst.com · www.ebmpapst.com

G2S097-FF06-15

AC centrifugal fan

forward-curved, single-intake
with housing (without flange)

Product drawing

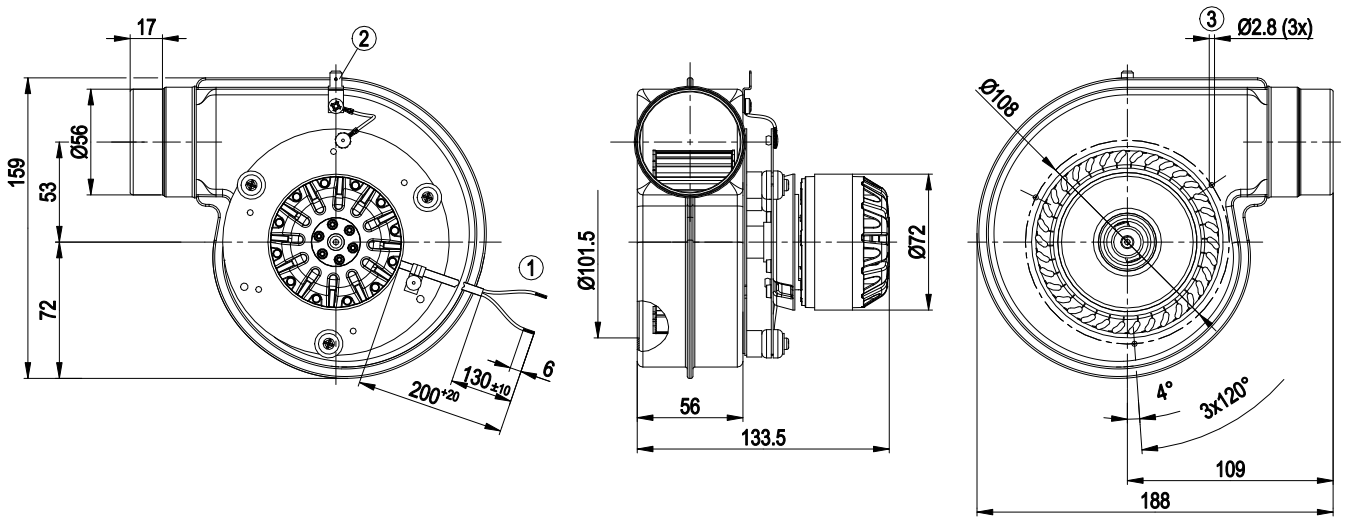

1	Cable halogen-silicone-free 2x 0.5 mm², 2x crimped splices
2	Ground connection with flat plug 6.3 x 1
3	Extruded hole according to DIN 7952 for screw with self-tapping thread according to DIN 7500

Connection diagram

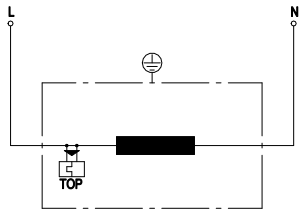

L	= white
N	= white
TOP	= thermal overload protector

ebm-papst Mulfingen GmbH & Co. KG · Bachmühle 2 · D-74673 Mulfingen · Phone +49 (0) 7938 81-0 · Fax +49 (0) 7938 81-110 · info1@de.ebmpapst.com · www.ebmpapst.com

G2S097-FF06-15

AC centrifugal fan

forward-curved, single-intake

with housing (without flange)

Curves: Air performance 50 Hz

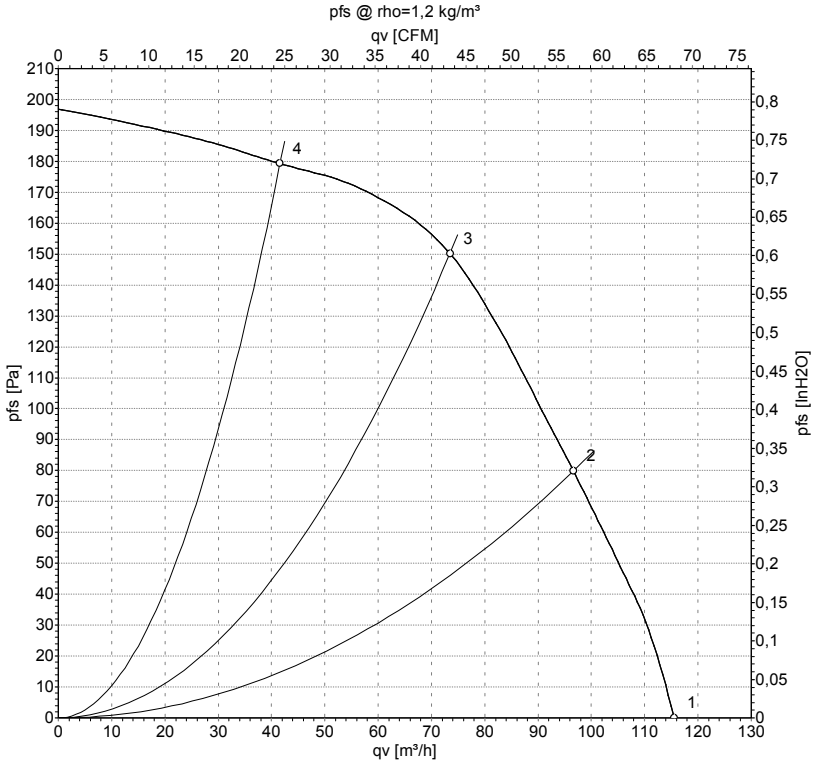

Measurement: LU-22762-1

Air performance measured according to ISO 5801 installation category A. For detailed information on the measurement setup, contact ebm-papst. Intake sound level: Sound power level according to ISO 13347 / sound pressure level measured at 1 m distance from fan axis. The values given are valid under the specified measuring conditions and may vary due to conditions of installation. For deviations from the standard configuration, the parameters have to be checked on the installed unit.

Measured values

	U	f	n	P_e	I	qv	p_{fs}	qv	p_{fs}
	V	Hz	min^{-1}	W	A	m^3/h	Pa	CFM	inH2O
1	230	50	2100	45	0.26	115	0	70	0.00
2	230	50	2305	41	0.24	95	80	55	0.32
3	230	50	2505	37	0.23	75	150	45	0.60
4	230	50	2665	34	0.22	40	180	25	0.72

U = Power supply · f = Frequency · n = Speed (rpm) · P_e = Power consumption · I = Current draw · qv = Air flow · p_{fs} = Pressure increase

ebm-papst Mulfingen GmbH & Co. KG · Bachmühle 2 · D-74673 Mulfingen · Phone +49 (0) 7938 81-0 · Fax +49 (0) 7938 81-110 · info1@de.ebmpapst.com · www.ebmpapst.com