K3G190-RG19-12

EC centrifugal module - RadiCal

backward curved, single inlet

with housing

ebm-papst Mulfingen GmbH & Co. KG
Bachmühle 2 · D-74673 Mulfingen
Phone +49 7938 81-0
Fax +49 7938 81-110
info1@de.ebmpapst.com
www.ebmpapst.com

Nominal data

Type	**K3G190-RG19-12**
Motor	**M3G055-CF**

Phase		1~
Nominal voltage	VAC	230
Nominal voltage range	VAC	200 .. 240
Frequency	Hz	50/60
Type of data definition		ml
Speed (rpm)	min^{-1}	3255
Power input	W	85
Current draw	A	0.75
Min. ambient temperature	°C	-25
Max. ambient temperature	°C	60

ml = Max. load · me = Max. efficiency · fa = Running at free air · cs = Customer specs · cu = Customer unit
Subject to alterations

EC centrifugal module - RadiCal

backward curved, single inlet

with housing

Technical features

Mass	1.75 kg
Size	190 mm
Surface of rotor	Thick layer passivated
Material of electronics housing	Die-cast aluminium
Material of impeller	PA plastic
Number of blades	7
Direction of rotation	Clockwise, seen on rotor
Type of protection	IP54
Insulation class	"B"
Humidity (F)/environmental protection class (H)	H1
Max. permissible ambient motor temp. (transp./ storage)	+ 80 °C
Min. permissible ambient motor temp. (transp./storage)	- 40 °C
Mounting position	Any
Condensate discharge holes	None, open rotor
Operation mode	S1
Motor bearing	Ball bearing
Technical features	- Output 10 VDC, max. 10 mA - Tach output - Output limit - Motor current limit - Soft start - Control input 0-10 VDC / PWM - Control interface with SELV potential safely disconnected from the mains - Overvoltage detection - Over-temperature protected electronics / motor - Line undervoltage detection
Touch current acc. IEC 60990 (measuring network Fig. 4, TN system)	<= 3.5 mA
Motor protection	Locked-rotor protection
Cable exit	Variable
Protection class	I (if protective earth is connected by customer)
Product conforming to standard	EN 60335-1; CE
Approval	EAC

EC centrifugal module - RadiCal

backward curved, single inlet

with housing

Product drawing

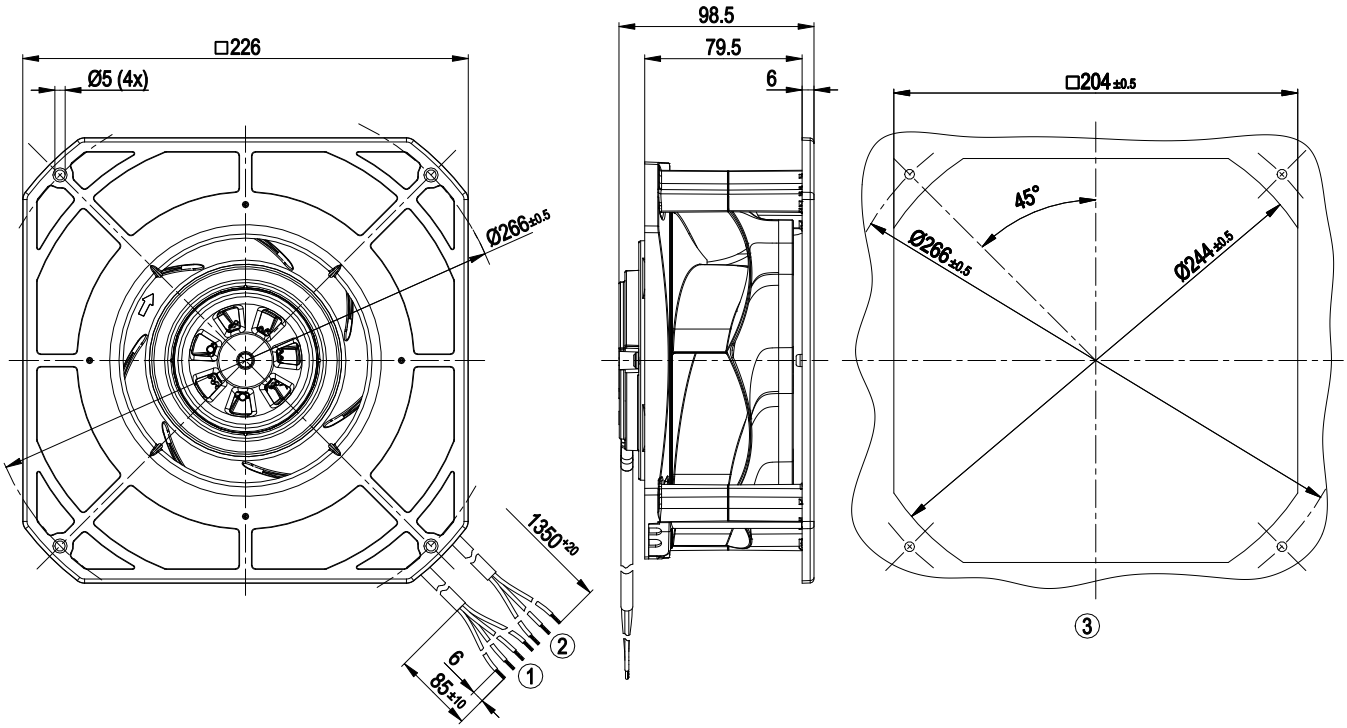

1	Control line PVC 4x 0.25 mm², 4x lead tips crimped
2	Connection line PVC 3x 0.5 mm², 3x lead tips crimped
3	Mounting dimensions

EC centrifugal module - RadiCal

backward curved, single inlet

with housing

Connection screen

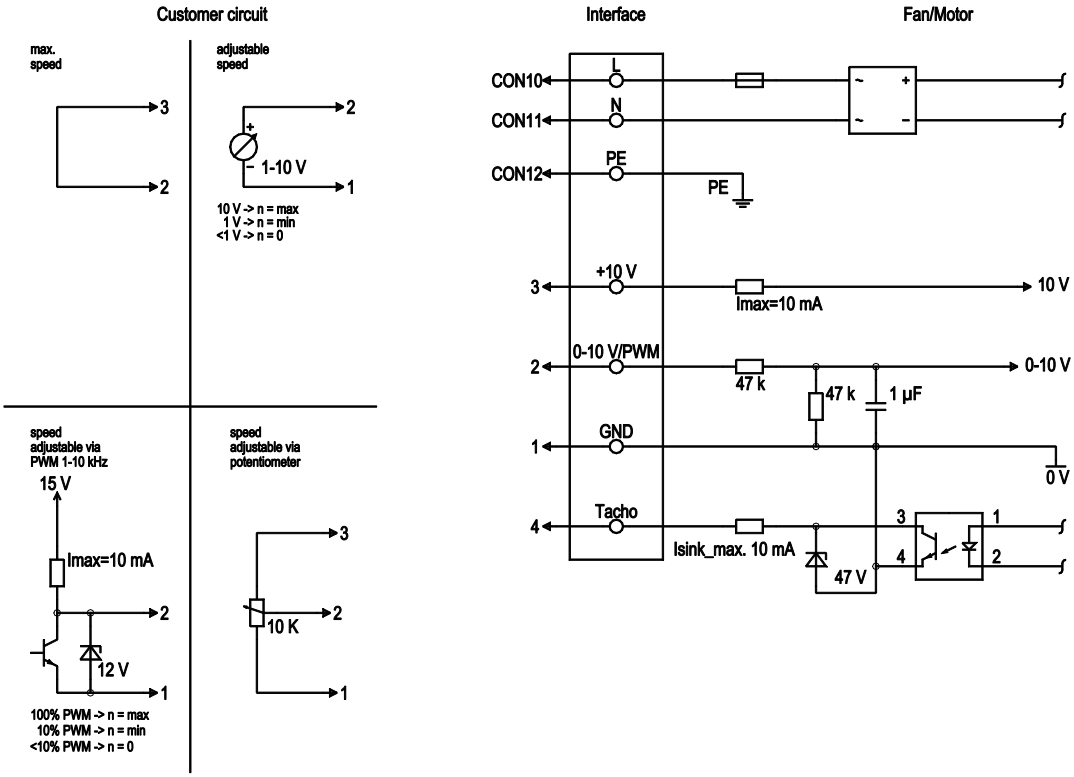

No.	Conn.	Designation	Colour	Function / assignment
	CON10	L	brown	Mains connection, power supply, phase, see type plate for voltage range
	CON11	N	blue	Mains connection, power supply, neutral conductor, see type plate for voltage range
	CON12	PE	green/yellow	Earth connection
	2	0- 10V PWM	yellow	0-10 V/PWM control input, Ri=100 kΩ, SELV
	4	Tach	white	Speed monitoring output, open collector, 1 pulse per revolution, Isink max = 10 mA, SELV
	3	+10 V	red	Fixed voltage output 10 VDC +/-3 %, Imax. 10 mA, short-circuit-proof, power supply for ext. devices (e.g. potentiometer), SELV
	1	GND	blue	Signal ground for control interface, SELV

ebmpapst

EC centrifugal module - RadiCal

backward curved, single inlet

with housing

Charts: Air flow 50 Hz

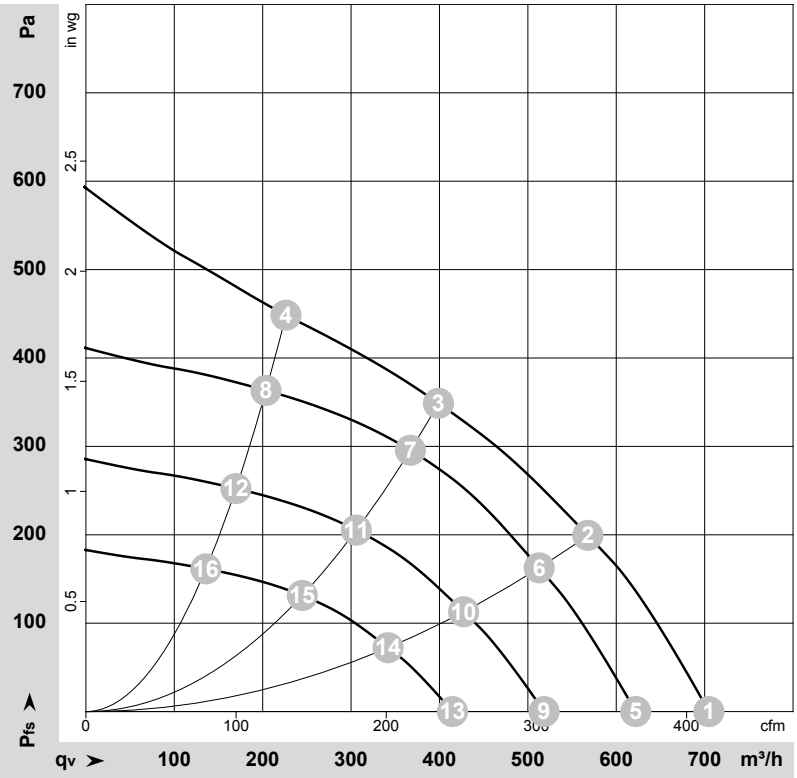

ρ = 1.15 kg/m³ ± 2 %

Measurement: LU-171588-1

Air performance measured as per ISO 5801 Installation category A. For detailed information on the measuring set-up, please contact ebm-papst. Suction-side noise levels: LwA measured as per ISO 13347 / LpA measured with 1m distance to fan axis. The values given are valid under the measuring conditions mentioned above and may vary according to the actual installation situation. With any deviation from the standard set-up, the specific values have to be checked and reviewed with the unit installed.

Measured values

	U	f	n	P_{ed}	I	q_V	p_{fs}	q_V	p_{fs}
	V	Hz	min^{-1}	W	A	m^3/h	Pa	cfm	inH2O
1	230	50	3400	72	0.64	705	0	415	0.00
2	230	50	3320	80	0.70	570	200	335	0.80
3	230	50	3255	85	0.75	400	350	235	1.41
4	230	50	3330	78	0.68	225	450	135	1.81
5	230	50	3000	50	0.44	620	0	365	0.00
6	230	50	3000	59	0.51	515	163	300	0.65
7	230	50	3000	66	0.58	365	296	215	1.19
8	230	50	3000	57	0.50	205	363	120	1.46
9	230	50	2500	29	0.25	520	0	305	0.00
10	230	50	2500	34	0.30	425	113	250	0.45
11	230	50	2500	38	0.33	305	205	180	0.82
12	230	50	2500	33	0.29	170	252	100	1.01
13	230	50	2000	15	0.13	415	0	245	0.00
14	230	50	2000	17	0.15	340	72	200	0.29
15	230	50	2000	20	0.17	245	131	145	0.53
16	230	50	2000	17	0.15	135	162	80	0.65

U = Supply voltage · f = Frequency · n = Speed (rpm) · P_{ed} = Power input · I = Current draw · q_V = Air flow · p_{fs} = Pressure increase

ebmpapst