K3G400-HB41-01

EC centrifugal module - RadiPac

backward-curved, single-intake

with support bracket

ebm-papst Mulfingen GmbH & Co. KGaA & Co. KG
Bachmühle 2 · D-74673 Mulfingen
Phone +49 7938 81-0
info1@de.ebmpapst.com
www.ebmpapst.com

Limited partnership · Headquarters Mulfingen
Amtsgericht (court of registration) Stuttgart · HRA 590344

General partner Elektrobau Mulfingen GmbH · Headquarters Mulfingen
Amtsgericht (court of registration) Stuttgart · HRB 590142

Nominal data

Type	**K3G400-HB41-01**
Motor	**M3G150-IF**

Phase		3~
Nominal voltage	VAC	400
Nominal voltage range	VAC	380 .. 480
Frequency	Hz	50/60
Method of obtaining data		ml
Speed (rpm)	min^{-1}	3700
Power consumption	W	6000
Current draw	A	9.1
Min. ambient temperature	°C	-40
Max. ambient temperature	°C	40

ml = Max. load · me = Max. efficiency · fa = Free air · cs = Customer specification · ce = Customer equipment
Subject to change

Data according to Commission Regulation (EU) 327/2011 (prEN 17166)

		Actual	Req. 2015
01 Overall efficiency η_{es}	%	62	59.6
02 Measurement category		A	
03 Efficiency category		Static	
04 Efficiency grade N		64.4	62
05 Variable speed drive		Yes	

09 Power consumption P_{ed}	kW	5.9
09 Air flow q_v	m³/h	6810
09 Pressure increase p_{fs}	Pa	1881
10 Speed (rpm) n	min^{-1}	3710
11 Specific ratio*		1.02

Data obtained at optimum efficiency level.

* Specific ratio = 1 + p_{fs} / 100 000 Pa

LU-193984

The efficiency values displayed for achieving conformity with the Ecodesign Regulation EU 327/2011 has been reached with defined air duct components (e.g. inlet rings).
The dimensions must be requested from ebm-papst. If other air conduction geometries are used on the installation side, the ebm-papst evaluation loses its validity/the conformity must be confirmed again.

The product does not fall within the scope of Regulation (EU) 2019/1781 due to the exception specified in Article 2 (2a) (motors completely integrated into a product).

EC centrifugal module - RadiPac

backward-curved, single-intake

with support bracket

Technical description

Weight	41.6 kg
Size	400 mm
Motor size	150
Rotor surface	Painted black
Electronics housing material	Die-cast aluminum
Impeller material	Sheet aluminum
Support plate material	Sheet steel, galvanized
Support bracket material	Steel, painted black
Inlet nozzle material	Sheet steel, galvanized
Number of blades	5
Direction of rotation	Clockwise, viewed toward rotor
Degree of protection	IP55
Insulation class	"F"
Moisture (F) / Environmental (H) protection class	H1
Ambient temperature note	Occasional start-up at temperatures between -40°C and -25°C is permitted. For continuous operation at ambient temperatures below -25°C (such as refrigeration applications), use must be made of a fan design with special low-temperature bearings.
Max. permitted ambient temp. for motor (transport/storage)	+80 °C
Min. permitted ambient temp. for motor (transport/storage)	-40 °C
Installation position	See product drawing
Condensation drainage holes	On rotor side
Mode	S1
Motor bearing	Ball bearing
Technical features	- Output 10 VDC, max. 10 mA - Output for slave 0-10 V - External 24 V input (parameter setting) - External release input - Alarm relay - Integrated PID controller - Power limiter - Motor current limitation - PFC, passive - RS-485 MODBUS-RTU - Soft start - Control input 0-10 VDC - Control interface with SELV potential safely disconnected from the mains - Thermal overload protection for electronics/motor - Line undervoltage / phase failure detection
Power Factor Correction (PFC)	Passive
EMC immunity to interference	According to EN 61000-6-2 (industrial environment)
EMC interference emission	According to EN 61000-6-4 (industrial environment)
Touch current according to IEC 60990 (measuring circuit Fig. 4, TN system)	<= 3.5 mA
Electrical hookup	Terminal box
Motor protection	Reverse polarity and locked-rotor protection

ebm-papst Mulfingen GmbH & Co. KGaA & Co. KG · Bachmühle 2 · D-74673 Mulfingen · Phone +49 (0) 7938 81-0 · info1@de.ebmpapst.com · www.ebmpapst.com

Protection class assignment	I; If a protective earth is connected. The built-in component has several local protection class assignments. The final protection class is determined by the intended installation.
Conformity with standards	EN 61800-5-1; CE; UKCA
Approval	CSA C22.2 No. 77 + CAN/CSA-E60730-1; EAC; UL 1004-7 + 60730-1

ebm-papst Mulfingen GmbH & Co. KGaA & Co. KG · Bachmühle 2 · D-74673 Mulfingen · Phone +49 (0) 7938 81-0 · info1@de.ebmpapst.com · www.ebmpapst.com

EC centrifugal module - RadiPac

backward-curved, single-intake

with support bracket

Product drawing

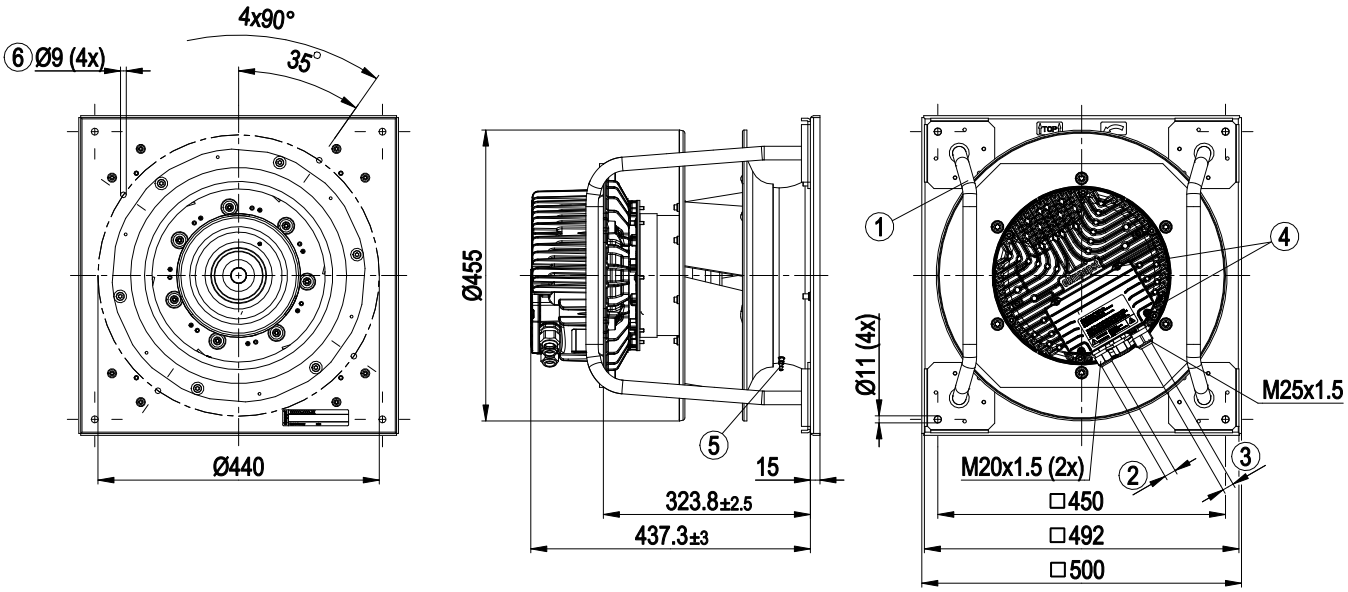

1	Installed position: shaft horizontal (install support struts only vertically as illustrated) or rotor on bottom; rotor on top on request
2	Cable diameter min. 4 mm, max. 10 mm, tightening torque 4 ± 0.6 Nm
3	Cable diameter min. 9 mm, max. 16 mm, tightening torque 6 ± 0.9 Nm
4	Tightening torque 3.5 ± 0.5 Nm
5	Inlet ring with pressure tap (k-factor: 188)
6	Mounting holes for FlowGrid

ebm-papst Mulfingen GmbH & Co. KGaA & Co. KG · Bachmühle 2 · D-74673 Mulfingen · Phone +49 (0) 7938 81-0 · info1@de.ebmpapst.com · www.ebmpapst.com

EC centrifugal module - RadiPac

backward-curved, single-intake

with support bracket

Connection diagram

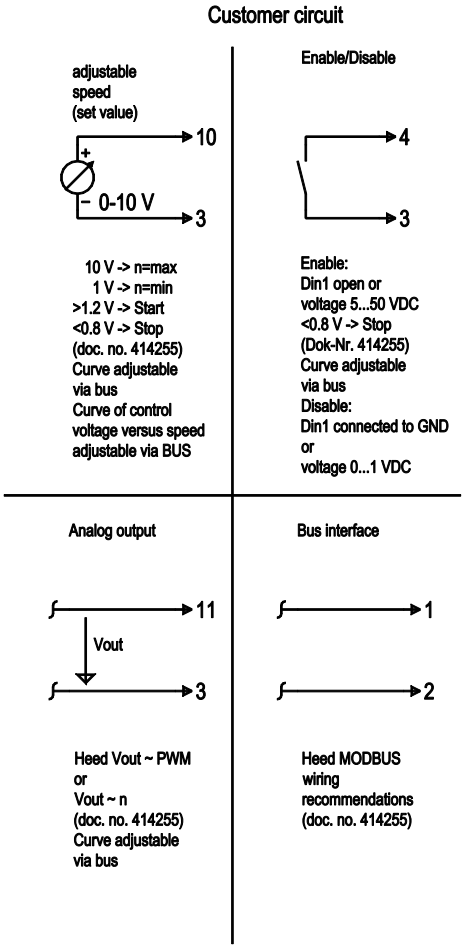

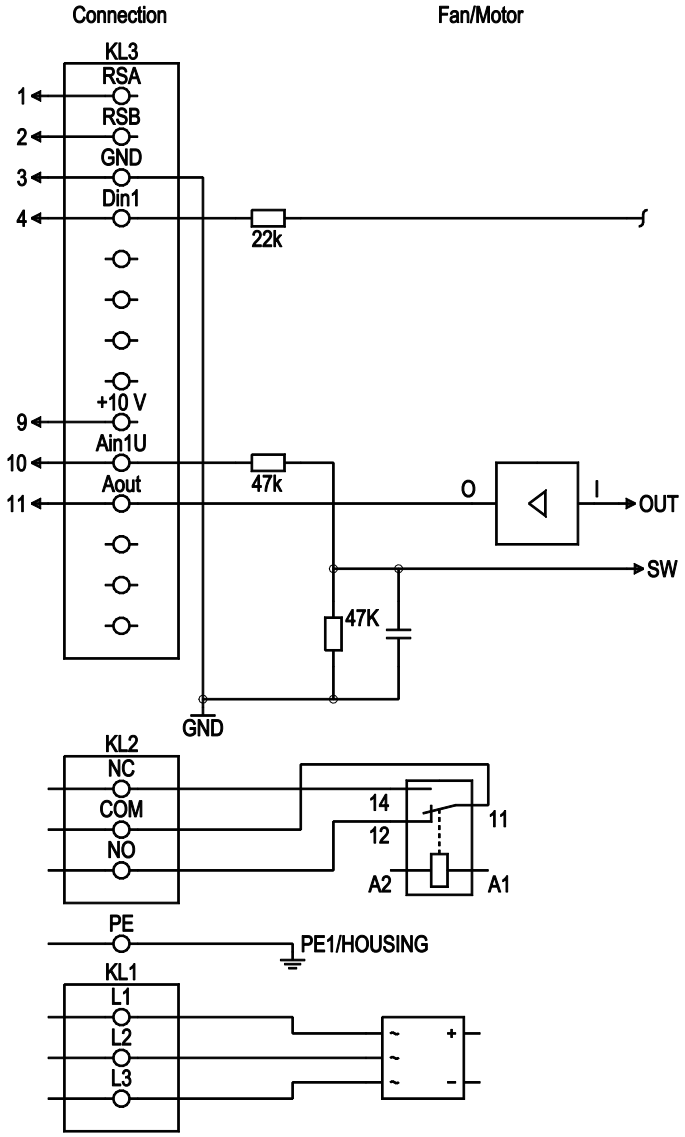

Terminal box connection diagram

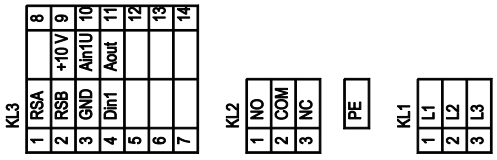

No.	Conn.	Designation	Function/assignment
KL 1	1, 2, 3	L1, L2, L3	Power supply, phase, see nameplate for voltage range
PE	PE	PE	Protective earth
KL2	1	NO	Status relay, floating status contact, option 1: make for failure, option 2: make for error for run monitor
KL2	2	COM	Status relay, floating status contact, common connection, contact rating 250 VAC / 2 A (AC1) / min. 10 mA; basic insulation on supply side and reinforced insulation on control interface side
KL2	3	NC	Status relay, floating status contact, option 1: break for failure, option 2: break for error message for run monitor
KL 3	1	RSA	RS485 interface for MODBUS, RSA; SELV
KL 3	2	RSB	RS485 interface for MODBUS, RSB; SELV
KL 3	3	GND	Reference ground for control interface; SELV

ebm-papst Mulfingen GmbH & Co. KGaA & Co. KG · Bachmühle 2 · D-74673 Mulfingen · Phone +49 (0) 7938 81-0 · info1@de.ebmpapst.com · www.ebmpapst.com

No.	Conn.	Designation	Function/assignment
KL 3	4	Din1	Digital input 1: enable electronics, enable: pin open or applied voltage 5-50 VDC disable: bridge to GND or applied voltage < 1 VDC reset function: triggers software reset after a level change to < 1 VDC; SELV
KL 3	-	-	-
KL 3	-	-	-
KL3	-	-	-
KL3	-	-	-
KL 3	9	10 V / max. 10 mA	Voltage output, power supply for external devices (e.g. potentiometers), SELV
KL 3	10	Ain1 U	Analog input 1, set value: 0-10 V, Ri = 100 kΩ, adjustable curve; SELV
KL 3	11	Aout	Analog output 0-10 VDC, max. 5 mA, output of current motor modulation level / motor speed adjustable curve; SELV
KL 3	-	-	-
KL 3	-	-	-
KL 3	-	-	-

ebm-papst Mulfingen GmbH & Co. KGaA & Co. KG · Bachmühle 2 · D-74673 Mulfingen · Phone +49 (0) 7938 81-0 · info1@de.ebmpapst.com · www.ebmpapst.com

K3G400-HB41-01

EC centrifugal module - RadiPac

backward-curved, single-intake

with support bracket

Curves: Air performance 50 Hz

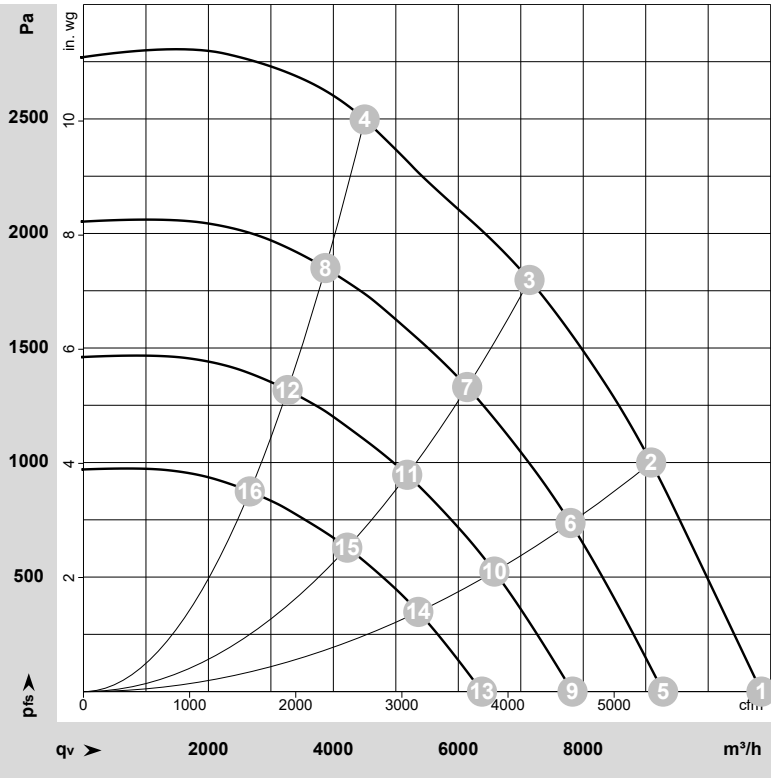

ρ = 1.15 kg/m³ ± 2 %

Measurement: LU-206043-1
Date: 2020-04-27
Nozzle: 40070-2-4013

Air performance measured according to ISO 5801 installation category A. For detailed information on the measurement setup, contact ebm-papst. Intake sound level: Sound power level according to ISO 13347 / sound pressure level measured at 1 m distance from fan axis. The values given are valid under the specified measuring conditions and may vary due to conditions of installation. For deviations from the standard configuration, the parameters have to be checked on the installed unit.

Measured values

	Wired	U	f	n	P_{ed}	I	LpA_{in}	LwA_{in}	LwA_{out}	q_V	p_{fs}	q_V	p_{fs}
		V	Hz	min^{-1}	W	A	dB(A)	dB(A)	dB(A)	m^3/h	Pa	cfm	in. wg
1	3~	400	50	3700	3562	5.52	94	102	107	10855	0	6390	0.00
2	3~	400	50	3700	5232	7.99	88	96	103	9085	1000	5350	4.01
3	3~	400	50	3700	6000	9.10	87	94	102	7140	1800	4200	7.23
4	3~	400	50	3700	6000	9.10	90	98	103	4500	2500	2650	10.04
5	3~	400	50	3200	2226	3.45	90	98	103	9280	0	5460	0.00
6	3~	400	50	3200	3300	5.04	84	92	99	7795	742	4590	2.98
7	3~	400	50	3200	3945	6.01	83	90	98	6140	1331	3615	5.34
8	3~	400	50	3200	3933	6.00	87	94	99	3875	1850	2280	7.43
9	3~	400	50	2700	1337	2.07	86	93	99	7830	0	4610	0.00
10	3~	400	50	2700	1982	3.03	80	88	95	6580	528	3870	2.12
11	3~	400	50	2700	2370	3.61	78	86	94	5180	948	3050	3.81
12	3~	400	50	2700	2362	3.60	82	90	95	3270	1317	1925	5.29
13	3~	400	50	2200	723	1.12	81	88	94	6380	0	3755	0.00
14	3~	400	50	2200	1072	1.64	75	83	90	5360	351	3155	1.41
15	3~	400	50	2200	1282	1.95	73	81	89	4220	629	2485	2.53
16	3~	400	50	2200	1278	1.95	77	85	90	2665	874	1565	3.51

Wired = Wiring · U = Voltage · f = Frequency · n = Speed (rpm) · P_{ed} = Power consumption · I = Current draw · LpA_{in} = Sound pressure level intake side · LwA_{in} = Sound power level intake side
LwA_{out} = Sound power level outlet side · q_V = Air flow · p_{fs} = Pressure increase

ebm-papst Mulfingen GmbH & Co. KGaA & Co. KG · Bachmühle 2 · D-74673 Mulfingen · Phone +49 (0) 7938 81-0 · info1@de.ebmpapst.com · www.ebmpapst.com