K3G560-PC04-01

EC centrifugal module - RadiPac

backward curved, single inlet

with support bracket

ebm-papst Mulfingen GmbH & Co. KG
Bachmühle 2 · D-74673 Mulfingen
Phone +49 7938 81-0
Fax +49 7938 81-110
info1@de.ebmpapst.com
www.ebmpapst.com

Nominal data

Type	**K3G560-PC04-01**
Motor	**M3G150-NA**

Phase		3~
Nominal voltage	VAC	400
Nominal voltage range	VAC	380 .. 480
Frequency	Hz	50/60
Type of data definition		ml
Speed (rpm)	min^{-1}	1760
Power input	W	5000
Current draw	A	7.7
Min. ambient temperature	°C	-25
Max. ambient temperature	°C	40

ml = Max. load · me = Max. efficiency · fa = Running at free air · cs = Customer specs · cu = Customer unit
Subject to alterations

Data in accordance with ecodesign regulation EU 327/2011

		Actual	Request 2015
01 Overall efficiency η_{es}	%	70.2	58.9
02 Measurement category		A	
03 Efficiency category		Static	
04 Efficiency grade N		73.3	62
05 Variable speed drive		Yes	

09 Power input P_{ed}	kW	5.03
09 Air flow q_v	m³/h	11760
09 Pressure increase p_{fs}	Pa	1035
10 Speed (rpm) n	min^{-1}	1770
11 Specific ratio*		1.01

Data definition with optimum efficiency.
The ErP data is determined using a motor-impeller combination in a standardised measurement configuration.

* Specific ratio = 1 + p_{fs} / 100 000 Pa

LU-173565

EC centrifugal module - RadiPac

backward curved, single inlet

with support bracket

Technical features

Mass	68 kg
Size	560 mm
Surface of rotor	Coated in black
Material of electronics housing	Die-cast aluminium
Material of impeller	Aluminium sheet
Material of mounting plate	Sheet steel, galvanised
Material of support bracket	Steel, coated in black
Material of inlet nozzle	Sheet steel, galvanised
Number of blades	5
Direction of rotation	Clockwise, seen on rotor
Type of protection	IP 55
Insulation class	"F"
Humidity (F)/environmental protection class (H)	H1
Max. permissible ambient motor temp. (transp./ storage)	+80 °C
Min. permissible ambient motor temp. (transp./storage)	-40 °C
Mounting position	Refer to product drawing
Condensate discharge holes	Rotor-side
Operation mode	S1
Motor bearing	Ball bearing
Technical features	- Output 10 VDC, max. 10 mA - Output 20 VDC, max. 50 mA - Output for slave 0-10 V - Operation and alarm display - Input for sensor 0-10 V or 4-20 mA - External 24 V input (programming) - External release input - Alarm relay - Integrated PID controller - Output limit - Motor current limit - PFC, passive - RS485 MODBUS RTU - Soft start - Control input 0-10 VDC / PWM - Control interface with SELV potential safely disconnected from the mains - Over-temperature protected electronics / motor - Line undervoltage / phase failure detection
EMC interference immunity	Acc. to EN 61000-6-2 (industrial environment)
EMC interference emission	Acc. to EN 61000-6-3 (household environment), except EN 61000-3-2 for professionally used devices with a total rated power greater than 1 kW
Touch current acc. IEC 60990 (measuring network Fig. 4, TN system)	<= 3.5 mA
Electrical leads	Via terminal box
Motor protection	Reverse polarity and locked-rotor protection
Protection class	I (if protective earth is connected by customer)

ebmpapst

Product conforming to standard	EN 61800-5-1; CE
Approval	C22.2 Nr.77 + CAN/CSA-E60730-1; EAC; UL 1004-7 + 60730

EC centrifugal module - RadiPac

backward curved, single inlet

with support bracket

Product drawing

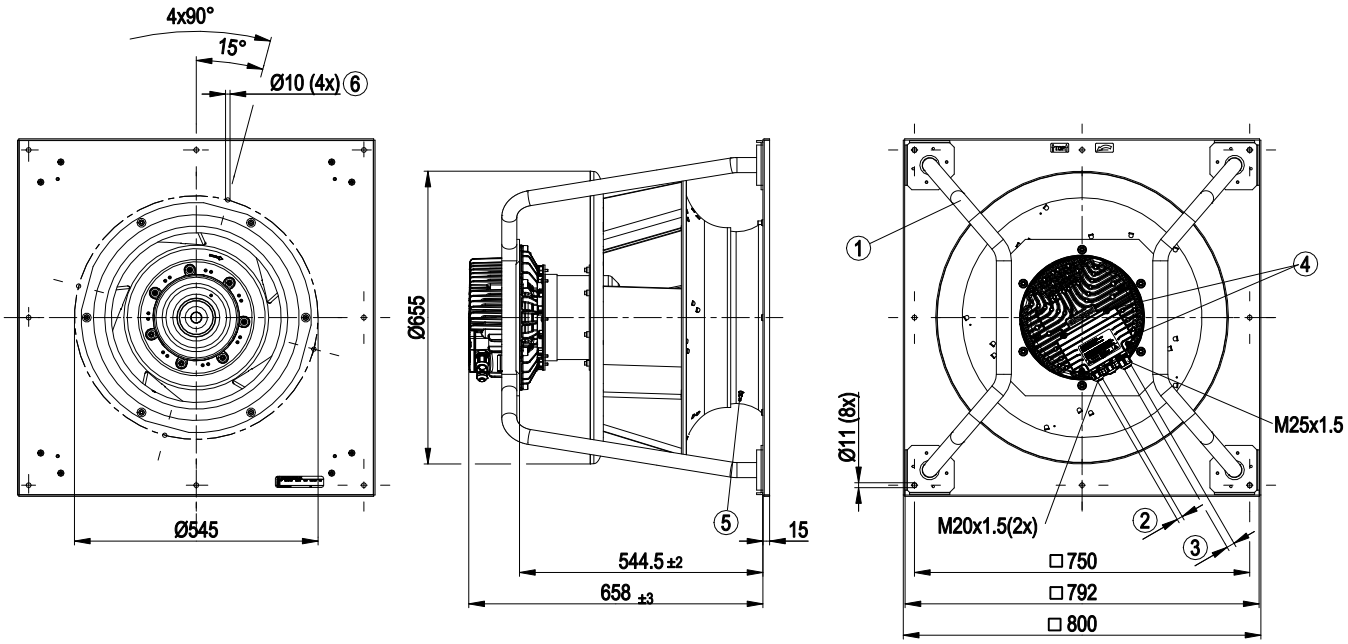

1	Installation position: Shaft horizontal (install the support struts only vertically as shown in the illustration!) or rotor on bottom; rotor on top on request
2	Cable diameter min. 4 mm, max. 10 mm, tightening torque 4±0.6 Nm
3	Cable diameter min. 9 mm, max. 16 mm, tightening torque 6±0.9 Nm
4	Tightening torque 3.5±0.5 Nm
5	Inlet nozzle with pressure tap (k-factor: 348)
6	Mounting holes for FlowGrid

EC centrifugal module - RadiPac

backward curved, single inlet

with support bracket

Connection screen

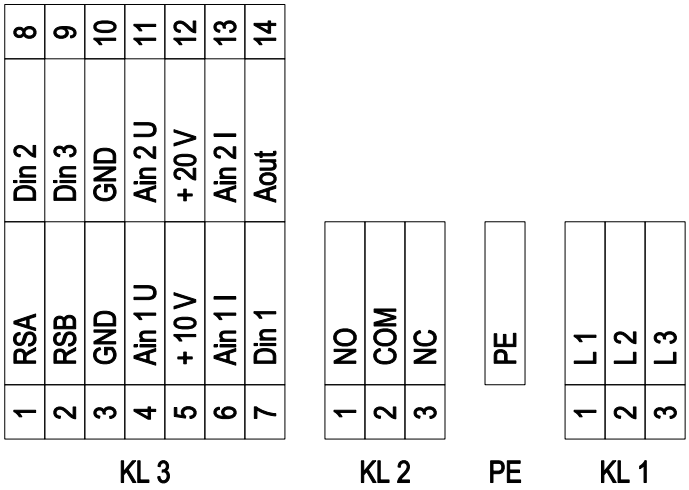

No.	Conn.	Designation	Function / assignment
KL 1	1	L1	Mains supply connection, supply voltage 3~380-480 VAC; 50/60 Hz
KL 1	2	L2	Mains supply connection, supply voltage 3~380-480 VAC; 50/60 Hz
KL 1	3	L3	Mains supply connection, supply voltage 3~380-480 VAC; 50/60 Hz
PE		PE	Earth connection, PE connection
KL 2	1	NO	Status relay, floating status contact; normally open; close with error
KL2	2	COM	Status relay; floating status contact; changeover contact; common connection; contact rating 250 VAC / max. 2 A (AC1) / min. 10 mA
KL2	3	NC	Status relay, floating status contact; break with error
KL 3	1	RSA	Bus connection RS-485, RSA, MODBUS RTU; SELV
KL 3	2	RSB	Bus connection RS-485, RSB, MODBUS RTU; SELV
KL 3	3 / 10	GND	Signal ground for control interface; SELV
KL 3	4	Ain1 U	Analogue input 1, set value: 0-10 V, Ri = 100 kΩ, parametrisable curve, only usable as alternative to input Ain1; SELV
KL 3	5	+ 10 V	Fixed voltage output 10 VDC, +10 V ±3%, max. 10 mA, short-circuit-proof, power supply for external devices (e.g. potentiometer), SELV
KL 3	6	Ain1 I	Analogue input 1, set value: 4-20 mA; Ri = 100 Ω, parametrisable curve, only usable as alternative to input Ain1 U; SELV
KL 3	7	Din1	Digital input 1: enabling of electronics, enabling: open pin or applied voltage 5-50 VDC disabling: bridge to GND or applied voltage <1 VDC reset function: triggers software reset after a level change to <1 VDC; SELV
KL 3	8	Din2	Digital input 2: parameter set switch 1/2, according to EEPROM setting, the valid/used parameter set can be selected via bus or via digital input DIN2. Parameter set 1: open pin or applied voltage 5-50 VDC Parameter set 2: bridge to GND or applied voltage <1 VDC; SELV
KL 3	9	Din3	Digital input 3: controller function of integrated controller, according to EEPROM setting, the controller function of the integrated controller is normally/inversely selectable per bus or per digital input normal: open pin or applied voltage 5-50 VDC inverse: bridge to GND or applied voltage <1 VDC; SELV
KL 3	11	Ain2 U	Analogue input 2, actual value: 0-10 V, Ri = 100 kΩ, parametrisable curve, only usable as alternative to input Ain2; SELV
KL 3	12	+ 20 V	Fixed voltage output 20 VDC, +20 V +25/-10%, max. 50 mA, short-circuit-proof, power supply for external devices (e.g. sensors); SELV

ebmpapst

No.	Conn.	Designation	Function / assignment
KL 3	13	Ain2 I	Analogue input 2, actual value: 4-20 mA, Ri = 100 Ω, parametrisable curve, only usable as alternative to input Ain2 U; SELV
KL 3	14	Aout	Analogue output 0-10 VDC, max. 5 mA, output of the current motor level control coefficient / motor speed parametrisable curve; SELV

K3G560-PC04-01

EC centrifugal module - RadiPac

backward curved, single inlet

with support bracket

Charts: Air flow 50 Hz

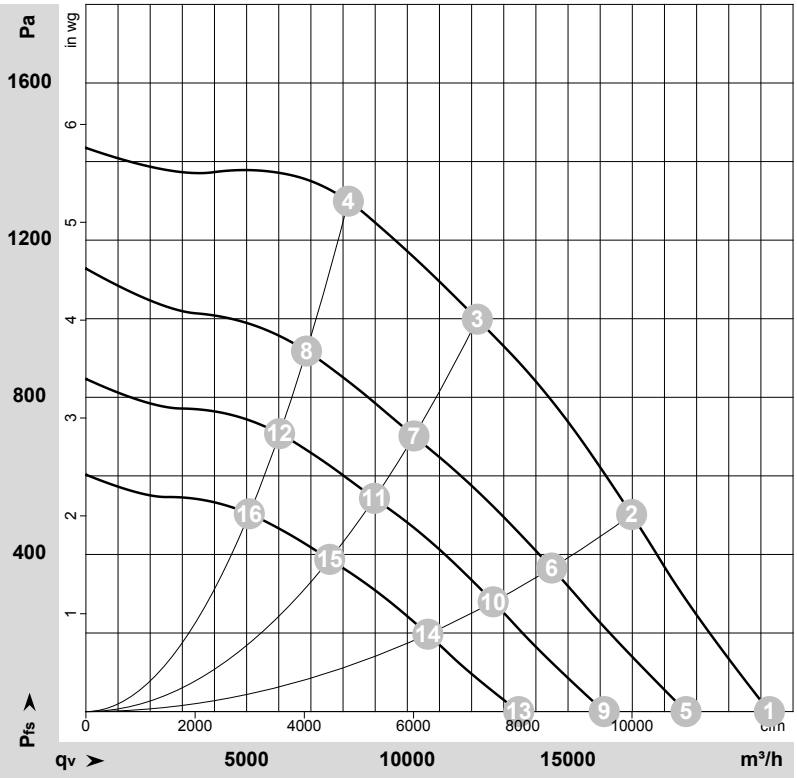

ρ = 1.15 kg/m³ ± 2 %

Measurement: LU-173565-1

Air performance measured as per ISO 5801 Installation category A. For detailed information on the measuring set-up, please contact ebm-papst. Suction-side noise levels: LwA measured as per ISO 13347 / LpA measured with 1m distance to fan axis. The values given are valid under the measuring conditions mentioned above and may vary according to the actual installation situation. With any deviation from the standard set-up, the specific values have to be checked and reviewed with the unit installed.

Measured values

	U	f	n	P_{ed}	I	LpA_{in}	LwA_{in}	LwA_{out}	q_V	p_{fs}	q_V	p_{fs}
	V	Hz	min^{-1}	W	A	dB(A)	dB(A)	dB(A)	m^3/h	Pa	cfm	in. wg
1	400	50	1760	2788	4.36	95	101	101	21265	0	12515	0.00
2	400	50	1760	4251	6.52	85	92	94	16980	500	9995	2.01
3	400	50	1760	5000	7.70	77	84	89	12180	1000	7170	4.01
4	400	50	1760	4788	7.32	80	87	92	8165	1300	4805	5.22
5	400	50	1575	1956	3.17	90	97	96	18670	0	10990	0.00
6	400	50	1510	2650	4.16	80	88	90	14495	368	8530	1.48
7	400	50	1480	2956	4.61	73	79	85	10205	701	6010	2.81
8	400	50	1490	2845	4.45	75	82	88	6865	920	4040	3.69
9	400	50	1365	1306	2.29	85	93	93	16125	0	9490	0.00
10	400	50	1325	1802	2.96	78	85	87	12670	281	7460	1.13
11	400	50	1305	2023	3.27	70	77	82	8980	543	5285	2.18
12	400	50	1310	1937	3.15	72	80	85	6025	709	3545	2.85
13	400	50	1145	827	1.58	81	89	90	13465	0	7925	0.00
14	400	50	1115	1113	2.04	73	80	83	10640	199	6260	0.80
15	400	50	1100	1271	2.25	65	72	77	7585	388	4465	1.56
16	400	50	1105	1212	2.17	67	74	79	5085	505	2990	2.03

U = Supply voltage · f = Frequency · n = Speed (rpm) · P_{ed} = Power input · I = Current draw · LpA_{in} = Sound pressure level inlet side · LwA_{in} = Sound power level inlet side · LwA_{out} = Sound power level outlet side
q_V = Air flow · p_{fs} = Pressure increase

ebmpapst