K3G630-AS05-01

EC centrifugal module - RadiPac

backward-curved, single-intake

with cube design

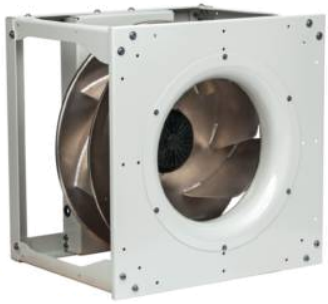

ebm-papst Mulfingen GmbH & Co. KG
Bachmühle 2 · D-74673 Mulfingen
Phone +49 7938 81-0
Fax +49 7938 81-110
info1@de.ebmpapst.com
www.ebmpapst.com

Limited partnership · Headquarters Mulfingen
Amtsgericht (court of registration) Stuttgart · HRA 590344

General partner Elektrobau Mulfingen GmbH · Headquarters Mulfingen
Amtsgericht (court of registration) Stuttgart · HRB 590142

Nominal data

Type	**K3G630-AS05-01**
Motor	**M3G200-QA**

Phase		3~
Nominal voltage	VAC	400
Nominal voltage range	VAC	380 .. 480
Frequency	Hz	50/60
Method of obtaining data		ml
Speed (rpm)	min^{-1}	1850
Power consumption	W	11000
Current draw	A	17
Min. ambient temperature	°C	-40
Max. ambient temperature	°C	40

ml = Max. load · me = Max. efficiency · fa = Free air · cs = Customer specification · ce = Customer equipment
Subject to change

Data according to Commission Regulation (EU) 327/2011 (prEN 17166)

		Actual	Req. 2015
01 Overall efficiency η_{es}	%	63.4	62
02 Measurement category		A	
03 Efficiency category		Static	
04 Efficiency grade N		63.4	62
05 Variable speed drive		Yes	

09 Power consumption P_{ed}	kW	11.07
09 Air flow q_v	m³/h	16605
09 Pressure increase p_{fs}	Pa	1452
10 Speed (rpm) n	min^{-1}	1840
11 Specific ratio*		1.02

Data obtained at optimum efficiency level.

* Specific ratio = 1 + p_{fs} / 100 000 Pa

LU-154333

The efficiency values displayed for achieving conformity with the Ecodesign Regulation EU 327/2011 has been reached with defined air duct components (e.g. inlet rings).
The dimensions must be requested from ebm-papst. If other air conduction geometries are used on the installation side, the ebm-papst evaluation loses its validity/the conformity must be confirmed again.

The product does not fall within the scope of Regulation (EU) 2019/1781 due to the exception specified in Article 2 (2a) (motors completely integrated into a product).

EC centrifugal module - RadiPac

backward-curved, single-intake

with cube design

Technical description

Weight	151 kg
Size	630 mm
Motor size	200
Rotor surface	Painted black
Electronics housing material	Die-cast aluminum, painted black
Impeller material	Sheet aluminum
Inlet nozzle material	Sheet steel, galvanized and coated with light gray plastic (RAL 7035)
Support structure material	Sheet steel, galvanized and coated with light gray plastic (RAL 7035)
Number of blades	7
Direction of rotation	Clockwise, viewed toward rotor
Degree of protection	IP55
Insulation class	"F"
Moisture (F) / Environmental (H) protection class	H2
Ambient temperature note	Occasional start-up at temperatures between -40°C and -25°C is permitted. For continuous operation at ambient temperatures below -25°C (such as refrigeration applications), use must be made of a fan design with special low-temperature bearings.
Max. permitted ambient temp. for motor (transport/storage)	+80 °C
Min. permitted ambient temp. for motor (transport/storage)	-40 °C
Installation position	Shaft horizontal (base mounting only); rotor on top or rotor on bottom on request
Condensation drainage holes	On rotor side
Mode	S1
Motor bearing	Ball bearing
Technical features	- Output 10 VDC, max. 10 mA - Output 20 VDC, max. 50 mA - Output for slave 0-10 V - Operation and alarm display - Input for sensor 0-10 V or 4-20 mA - External 24 V input (parameter setting) - External release input - Alarm relay - Integrated PID controller - Power limiter - Motor current limitation - PFC, passive - RS-485 MODBUS-RTU - Soft start - Control input 0-10 VDC / PWM - Control interface with SELV potential safely disconnected from the mains - Temperature derating - Thermal overload protection for electronics/motor - Line undervoltage / phase failure detection
EMC immunity to interference	According to EN 61000-6-2 (industrial environment)
EMC interference emission	According to EN 61000-6-4 (industrial environment)
Touch current according to IEC 60990 (measuring circuit Fig. 4, TN system)	<= 3.5 mA
Electrical hookup	Terminal box

ebm-papst Mulfingen GmbH & Co. KG · Bachmühle 2 · D-74673 Mulfingen · Phone +49 (0) 7938 81-0 · Fax +49 (0) 7938 81-110 · info1@de.ebmpapst.com · www.ebmpapst.com

Motor protection	Reverse polarity and locked-rotor protection
Protection class assignment	I; If a protective earth is connected by the customer This component for installation may have several local protection classes. This information relates to this component's basic design. The final protection class is based on the component's intended installation and connection.
Conformity with standards	EN 61800-5-1; CE; UKCA
Approval	EAC; UL 1004-7 + 60730-1; CSA C22.2 No. 77 + CAN/CSA-E60730-1

ebm-papst Mulfingen GmbH & Co. KG · Bachmühle 2 · D-74673 Mulfingen · Phone +49 (0) 7938 81-0 · Fax +49 (0) 7938 81-110 · info1@de.ebmpapst.com · www.ebmpapst.com

EC centrifugal module - RadiPac

backward-curved, single-intake

with cube design

Product drawing

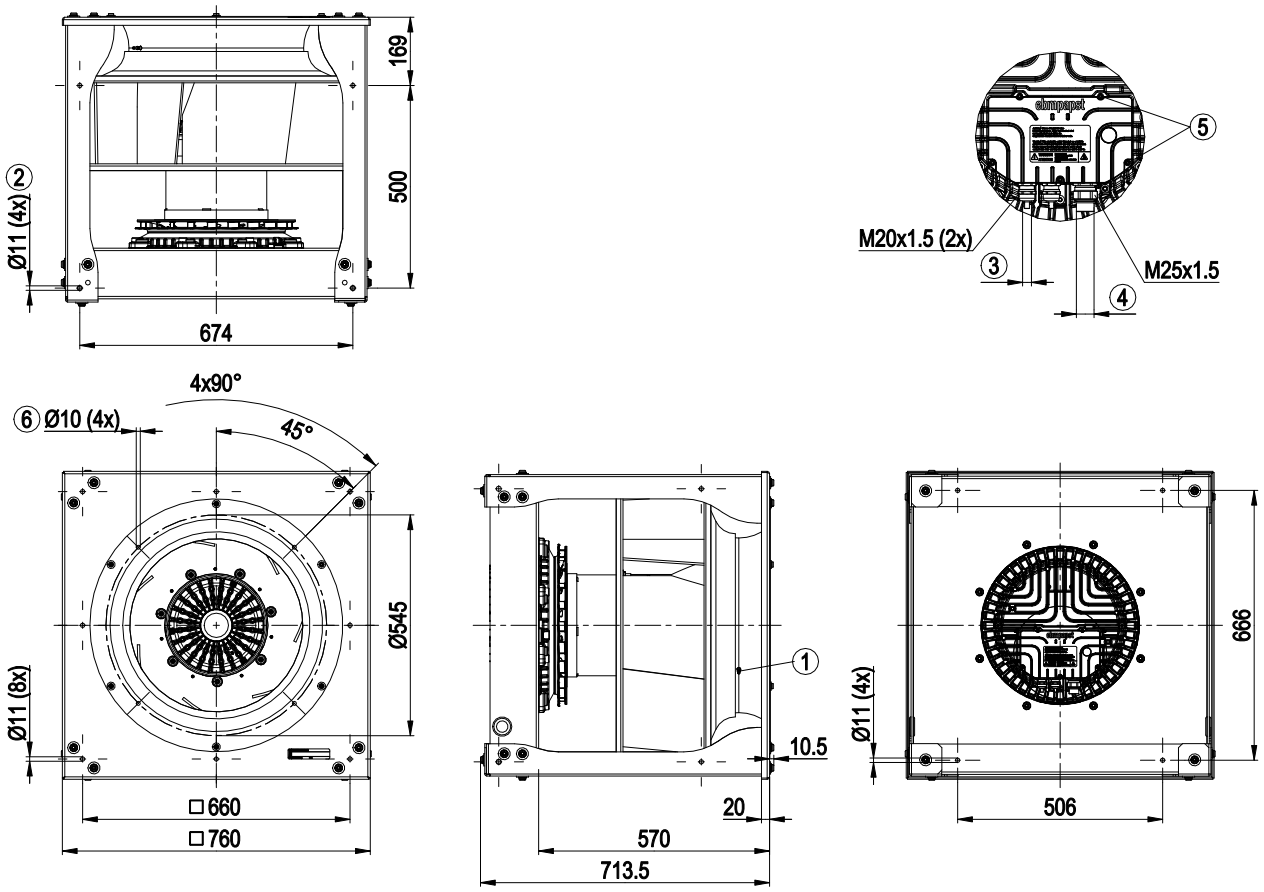

1	Inlet ring with pressure tap (k-factor: 438)
2	Mounting position for vibration-absorbing elements, tightening torque max. 40 Nm
3	Cable diameter min. 5 mm, max. 13 mm; tightening torque 6 ± 0.9 Nm
4	Cable diameter min. 16 mm, max. 20.5 mm, tightening torque 6 ± 0.9 Nm
5	Tightening torque 3.5 ± 0.5 Nm
6	Attachment holes for FlowGrid 00630-2-2957 (not included in scope of delivery)
	The drawing shows the dimensions only and does not represent the installation position

ebm-papst Mulfingen GmbH & Co. KG · Bachmühle 2 · D-74673 Mulfingen · Phone +49 (0) 7938 81-0 · Fax +49 (0) 7938 81-110 · info1@de.ebmpapst.com · www.ebmpapst.com

Connection diagram

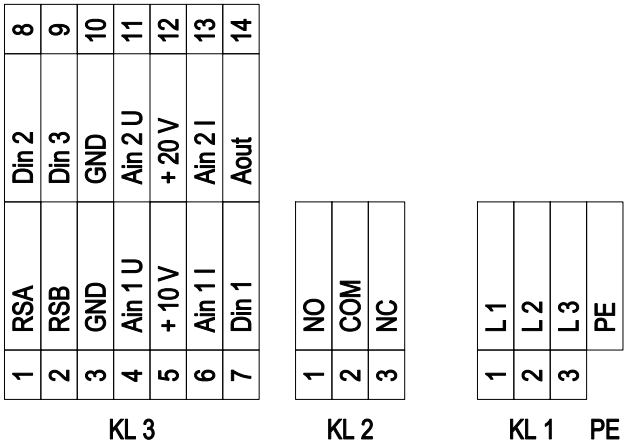

No.	Conn.	Designation	Function/assignment
KL 1	1	L1	Supply connection, power supply 3-phase 380-480 VAC, 50/60 Hz
KL 1	2	L2	Supply connection, power supply 3-phase 380-480 VAC, 50/60 Hz
KL 1	3	L3	Supply connection, power supply 3-phase 380-480 VAC, 50/60 Hz
PE		PE	Ground connection, PE connection
KL 2	1	NO	Status relay, floating status contact, make for failure
KL2	2	COM	Status relay, floating status contact; changeover contact; common connection; contact rating 250 VAC / max. 2 A (AC1) / min. 10 mA
KL2	3	NC	Status relay, floating status contact, break for failure
KL 3	1	RSA	Bus connection RS485, RSA, MODBUS RTU
KL 3	2	RSB	Bus connection RS485, RSB, MODBUS RTU
KL 3	3 / 10	GND	Reference ground for control interface
KL 3	4	Ain1 U	Analog input 1 (set value), 0-10 V, Ri = 100 kΩ, adjustable curves, only usable as alternative to input Ain1I
KL 3	5	+ 10 V	Fixed voltage output 10 VDC, +10 V ±3%; max. 10 mA; short-circuit-proof; power supply for external devices (e.g. pot)
KL 3	6	Ain1 I	Analog input 1 (set value), 4-20 mA, Ri = 100 Ω, adjustable curves, only usable as alternative to input Ain1U
KL 3	7	Din1	Digital input 1: enable electronics, enable: pin open or applied voltage 5...50 VDC: disable: bridge to GND or applied voltage < 1 VDC; reset function: triggers software reset after a level change to < 1 V
KL 3	8	Din2	Digital input 2: Switching parameter sets 1/2; according to EEPROM setting, the valid or used parameter set can be selected via bus or via digital input DIN2. Parameter set 1: pin open or applied voltage 5-50 VDC; parameter set 2: bridge to GND or applied voltage < 1 VDC
KL 3	9	Din3	Digital input 3: according to EEPROM setting, the integrated controller's direction of action can be selected as normal/inverse via bus or digital input; normal: pin open or applied voltage 5-50 VDC inverse: bridge to GND or applied voltage < 1 VDC
KL 3	11	Ain2 U	Analog input 2, measured value 0-10 V, Ri = 100 kΩ, adjustable curve, only usable as alternative to input Ain2I
KL 3	12	+ 20 V	Fixed voltage output 20 VDC, 20 V +25/-10%, max. 50 mA, short-circuit-proof power supply for external devices (e.g. sensors)
KL 3	13	Ain2 I	Analog input 2, measured value: 4-20 mA, Ri = 100 Ω, adjustable curve, only usable as alternative to input Ain2U
KL 3	14	Aout	Analog output 0-10 V, max. 5 mA, output of current motor modulation level / of the current motor speed. Adjustable curve.

ebm-papst Mulfingen GmbH & Co. KG · Bachmühle 2 · D-74673 Mulfingen · Phone +49 (0) 7938 81-0 · Fax +49 (0) 7938 81-110 · info1@de.ebmpapst.com · www.ebmpapst.com

K3G630-AS05-01

EC centrifugal module - RadiPac

backward-curved, single-intake

with cube design

Curves: Air performance 50 Hz

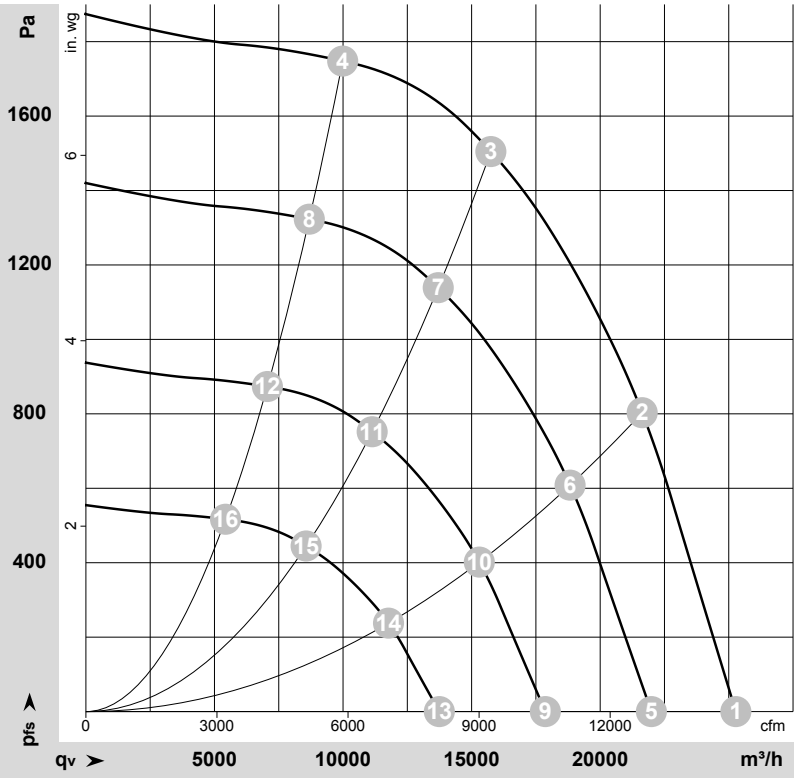

ρ = 1.15 kg/m³ ± 2 %

Measurement: LU-154333-1

Air performance measured according to ISO 5801 installation category A. For detailed information on the measurement setup, contact ebm-papst. Intake sound level: Sound power level according to ISO 13347 / sound pressure level measured at 1 m distance from fan axis. The values given are valid under the specified measuring conditions and may vary due to conditions of installation. For deviations from the standard configuration, the parameters have to be checked on the installed unit.

Measured values

	Wired	U	f	n	P_{ed}	I	LpA_{in}	LwA_{in}	LwA_{out}	q_V	p_{fs}	q_V	p_{fs}
		V	Hz	min^{-1}	W	A	dB(A)	dB(A)	dB(A)	m^3/h	Pa	cfm	in. wg
1	3~	400	50	1850	7342	11.42	93	102	107	25275	0	14875	0.00
2	3~	400	50	1850	10065	15.46	86	95	100	21635	800	12735	3.21
3	3~	400	50	1850	11000	17.00	83	90	97	15750	1500	9270	6.02
4	3~	400	50	1850	9541	14.64	85	93	99	9985	1750	5880	7.03
5	3~	400	50	1600	4835	7.52	90	98	103	21990	0	12945	0.00
6	3~	400	50	1600	6639	10.20	83	91	97	18830	622	11085	2.50
7	3~	400	50	1600	7212	11.05	79	87	93	13700	1142	8065	4.58
8	3~	400	50	1600	6283	9.64	82	89	95	8690	1323	5115	5.31
9	3~	400	50	1300	2593	4.03	84	93	98	17870	0	10515	0.00
10	3~	400	50	1300	3561	5.47	78	86	92	15300	410	9005	1.65
11	3~	400	50	1300	3869	5.93	74	82	88	11135	754	6555	3.03
12	3~	400	50	1300	3370	5.17	76	84	90	7060	873	4155	3.50
13	3~	400	50	1000	1180	1.84	78	86	91	13745	0	8090	0.00
14	3~	400	50	1000	1621	2.49	71	80	85	11770	243	6925	0.98
15	3~	400	50	1000	1761	2.70	67	75	81	8565	446	5040	1.79
16	3~	400	50	1000	1534	2.35	70	77	83	5430	517	3195	2.08

Wired = Wiring · U = Voltage · f = Frequency · n = Speed (rpm) · P_{ed} = Power consumption · I = Current draw · LpA_{in} = Sound pressure level intake side · LwA_{in} = Sound power level intake side
LwA_{out} = Sound power level outlet side · q_V = Air flow · p_{fs} = Pressure increase

ebm-papst Mulfingen GmbH & Co. KG · Bachmühle 2 · D-74673 Mulfingen · Phone +49 (0) 7938 81-0 · Fax +49 (0) 7938 81-110 · info1@de.ebmpapst.com · www.ebmpapst.com