R2E150-AN91-13

AC circulation blower for hot air

for solid-fuel heating systems

ebm-papst Mulfingen GmbH & Co. KG
Bachmühle 2 · D-74673 Mulfingen
Phone +49 7938 81-0
Fax +49 7938 81-110
info1@de.ebmpapst.com
www.ebmpapst.com

Nominal data

Type	**R2E150-AN91-13**
Motor	**M2E068-BF**

Phase		1~
Nominal voltage	VAC	230
Frequency	Hz	50
Method of obtaining data		fa
Valid for approval/standard		CE
Speed (rpm)	min^{-1}	2400
Power consumption	W	32
Current draw	A	0.14
Capacitor	µF	1
Capacitor voltage	VDB	400
Capacitor standard		S0 (CE)
Min. back pressure	Pa	0
Min. back pressure	inH2O	0
Min. ambient temperature	°C	-25
Max. ambient temperature	°C	80

ml = Max. load · me = Max. efficiency · fa = Free air · cs = Customer specification · ce = Customer equipment
Subject to change

AC circulation blower for hot air

for solid-fuel heating systems

Technical description

Weight	1.7 kg
Fan size	150 mm
Rotor surface	Partly cast in aluminum
Impeller material	Sheet steel, stainless
Support plate material	Sheet steel, hot-dip galvanized
Number of blades	6
Motor suspension	Motor mounted on support plate for one-sided vibration damping
Direction of rotation	Counterclockwise, viewed toward rotor
Degree of protection	IP44; installation- and position-dependent
Insulation class	"B"
Moisture (F) / Environmental (H) protection class	H0 - dry environment
Max. permitted ambient temp. for motor (transport/storage)	+ 80 °C
Min. permitted ambient temp. for motor (transport/storage)	- 40 °C
Installation position	Any
Condensation drainage holes	None
Mode	S1
Motor bearing	Ball bearing
Touch current according to IEC 60990 (measuring circuit Fig. 4, TN system)	< 0.75 mA
Motor protection	Thermal overload protector (TOP) internally connected
With cable	Lateral
Protection class	I (with customer connection of protective earth)
Motor capacitor according to EN 60252-1 in safety protection class	S2
Conformity with standards	EN 60335-1; CE

AC circulation blower for hot air

for solid-fuel heating systems

Product drawing

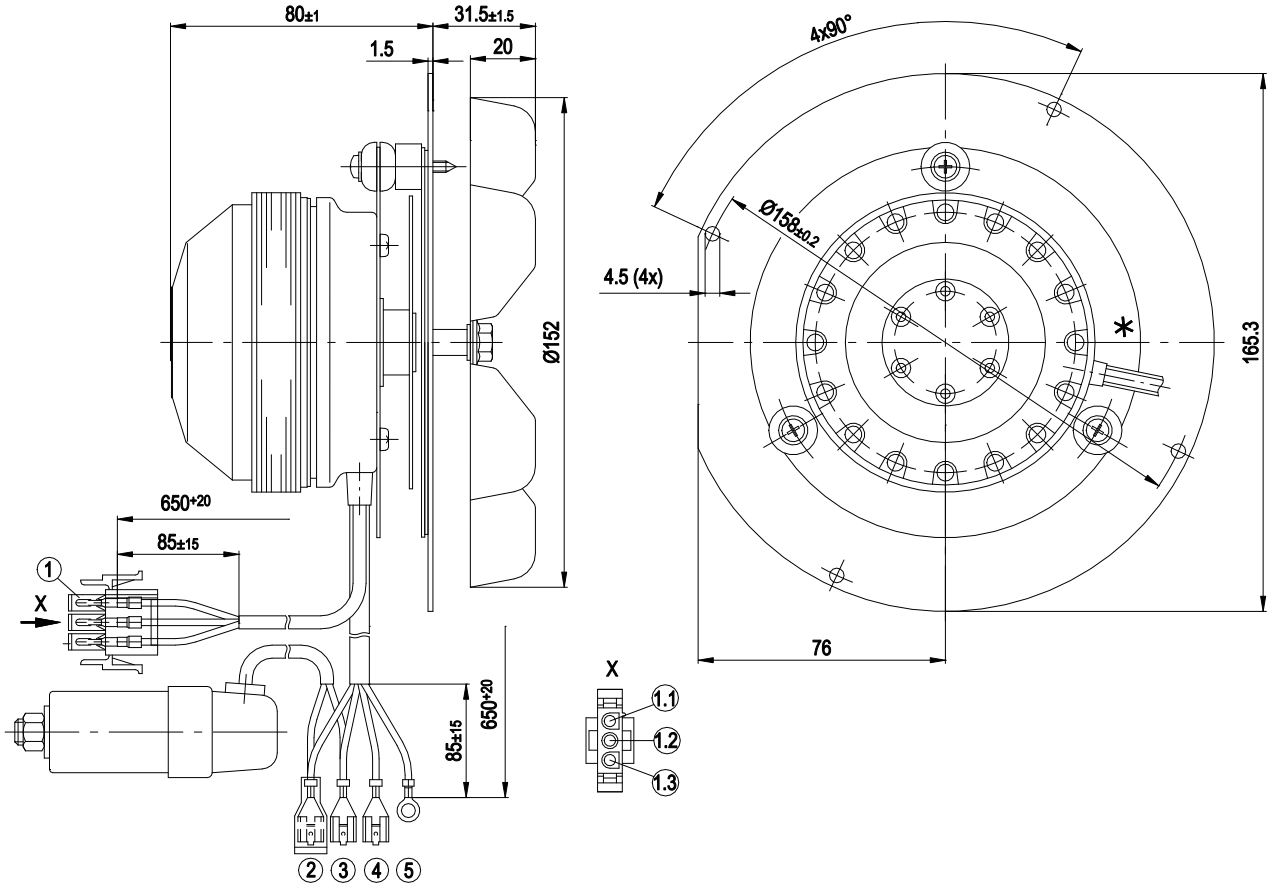

1	Connector housing AMP 356 756-4 with 3 x plug pin AMP 926 885-1
1.1	+ / red
1.2	- / black
1.3	out / white
2	Flat push-on receptacle AMP 160 256-1 insulated with heat shrink tube
3	Flat push-on receptacle AMP 160 256-1, 6.3 x 0.8 mm
4	Flat push-on receptacle AMP 160 389-3, 6.3 x 0.8 mm
5	Ring terminal dia. 4.3 x 7.0 x 9.5

AC circulation blower for hot air

for solid-fuel heating systems

Connection diagram

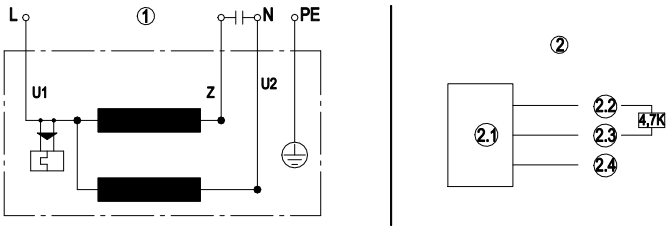

1	Fan connection diagram
U1	blue
Z	brown
U2	black
PE	green/yellow
2	Hall IC circuit
2.1	Hall IC
2.2	red (+5 V)
2.3	white (out)
2.4	black (0 V)

R2E150-AN91-13

AC circulation blower for hot air

for solid-fuel heating systems

Curves: Air performance 50 Hz

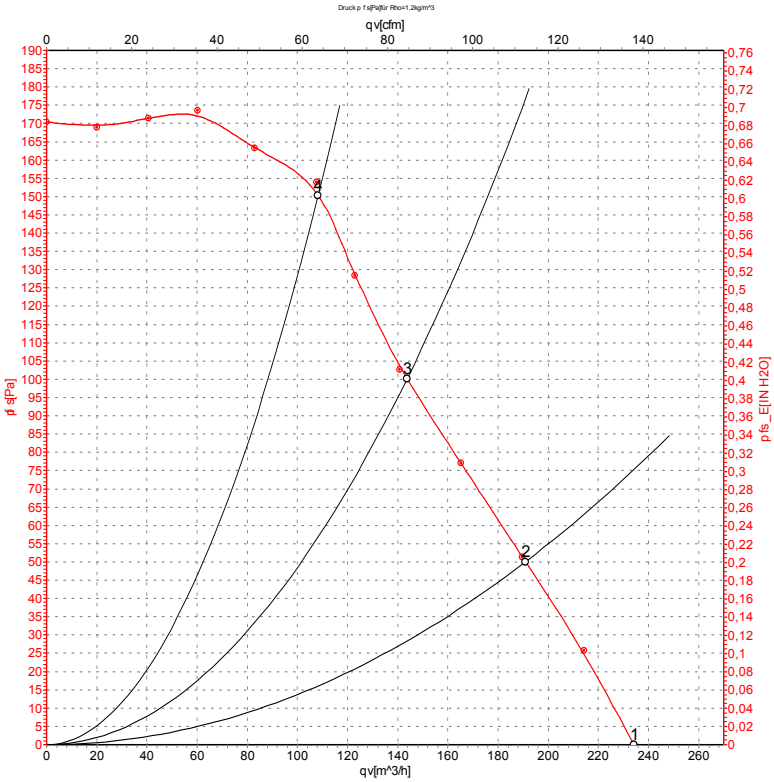

Measurement: LU-75643-1

Air performance measured according to ISO 5801 installation category A. For detailed information on the measurement setup, contact ebm-papst. Intake sound level: Sound power level according to ISO 13347 / sound pressure level measured at 1 m distance from fan axis. The values given are valid under the specified measuring conditions and may vary due to conditions of installation. For deviations from the standard configuration, the parameters have to be checked on the installed unit.

Measured values

	U	f	n	P_e	I	q_V	p_{fs}	q_V	p_{fs}
	V	Hz	min^{-1}	W	A	m^3/h	Pa	cfm	inH2O
1	230	50	2400	32	0.14	235	0	140	0.00
2	230	50	2375	32	0.14	190	50	110	0.20
3	230	50	2400	31	0.13	145	100	85	0.40
4	230	50	2500	29	0.13	110	150	65	0.60

U = Power supply · f = Frequency · n = Speed (rpm) · P_e = Power consumption · I = Current draw · q_V = Air flow · p_{fs} = Pressure increase