R2E190-RA26-53

AC centrifugal fan - RadiCal

backward-curved, single-intake

Nominal data

Type	**R2E190-RA26-53**
Motor	**M2E068-BF**

Phase		1~	1~	1~
Nominal voltage	VAC	230	230	230
Frequency	Hz	50	60	60
Method of obtaining data		ml	ml	ml
Valid for approval/standard		CE	CE	UL 2111
Speed (rpm)	min^{-1}	2350	2500	2500
Power consumption	W	52	65	70
Current draw	A	0.23	0.29	0.30
Capacitor	µF	1.5	1.5	1.5
Capacitor voltage	VDB	400	400	400
Capacitor standard		S0 (CE)	S0 (CE)	UL
Min. back pressure	Pa	0	0	0
Min. back pressure	in. wg	0	0	0
Min. ambient temperature	°C	-25	-25	-25
Max. ambient temperature	°C	80	80	80
Starting current	A	0.37	0.37	

ml = Max. load · me = Max. efficiency · fa = Free air · cs = Customer specification · ce = Customer equipment
Subject to change

ebmpapst

AC centrifugal fan - RadiCal

backward-curved, single-intake

Technical description

Weight	1.258 kg
Size	190 mm
Motor size	68
Rotor surface	Painted black
Impeller material	PA plastic, galvanized sheet-metal plate
Number of blades	7
Direction of rotation	Clockwise, viewed toward rotor
Degree of protection	IP44; installation- and position-dependent as per EN 60034-5
Insulation class	"F"
Moisture (F) / Environmental (H) protection class	H1
Max. permitted ambient temp. for motor (transport/storage)	+ 80 °C
Min. permitted ambient temp. for motor (transport/storage)	- 40 °C
Installation position	Shaft horizontal or rotor on bottom; rotor on top on request
Condensation drainage holes	On rotor side
Mode	S1
Motor bearing	Ball bearing
Touch current according to IEC 60990 (measuring circuit Fig. 4, TN system)	< 0.75 mA
Motor protection	Thermal overload protector (TOP) internally connected
With cable	Variable
Protection class	I (with customer connection of protective earth)
Conformity with standards	EN 60335-1; CE
Approval	UL 1004-3; EAC; CCC; CSA C22.2 No. 77

ebmpapst

AC centrifugal fan - RadiCal

backward-curved, single-intake

Product drawing

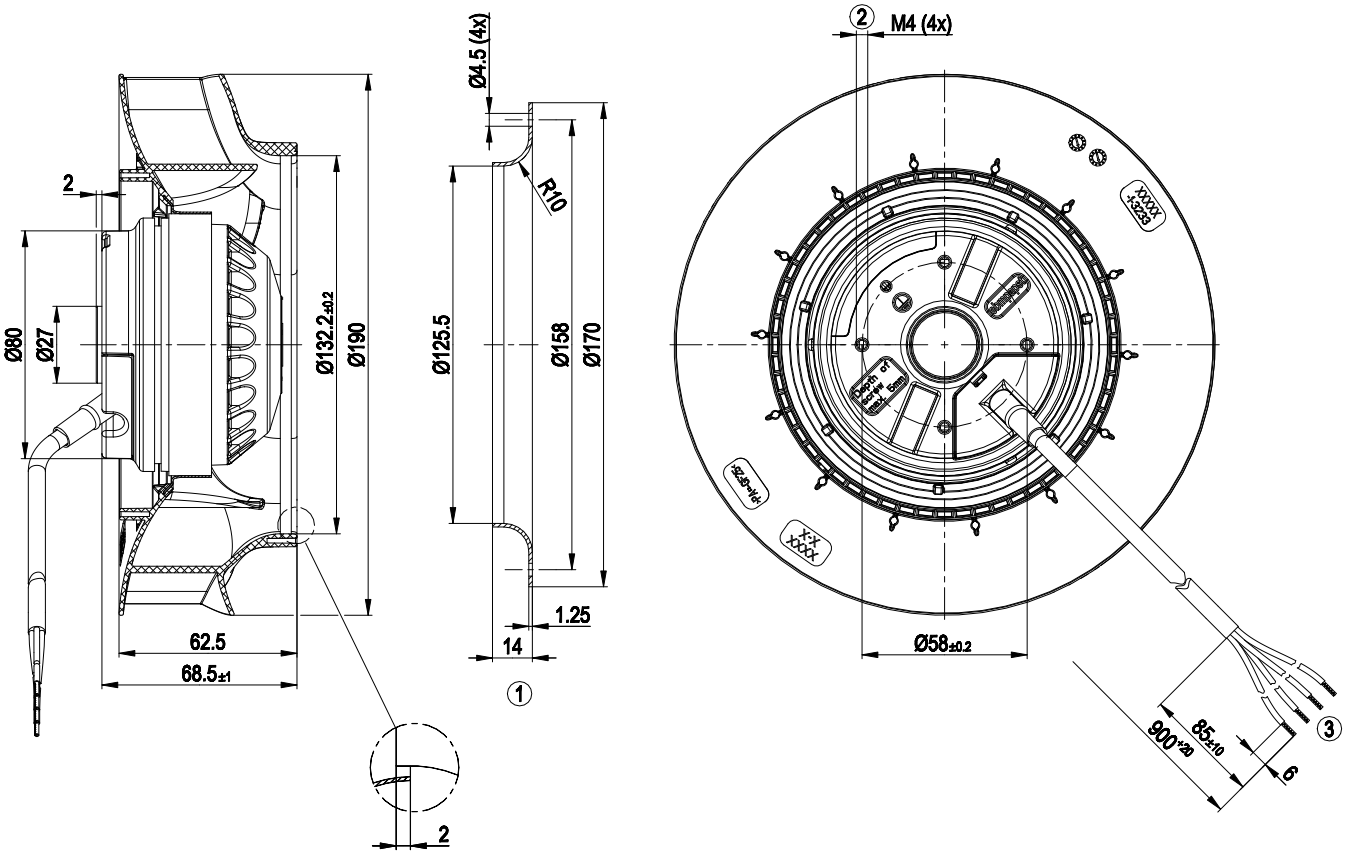

1	Accessory part: inlet ring 09576-2-4013, not included in scope of delivery
2	Max. clearance for screw 5 mm
3	Cable PFA AWG20, 4x crimped splices

Connection diagram

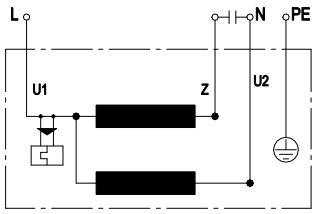

U1	blue	Z	brown	U2	black
PE	green/yellow				

AC centrifugal fan - RadiCal

backward-curved, single-intake

Curves: Air performance 50 Hz

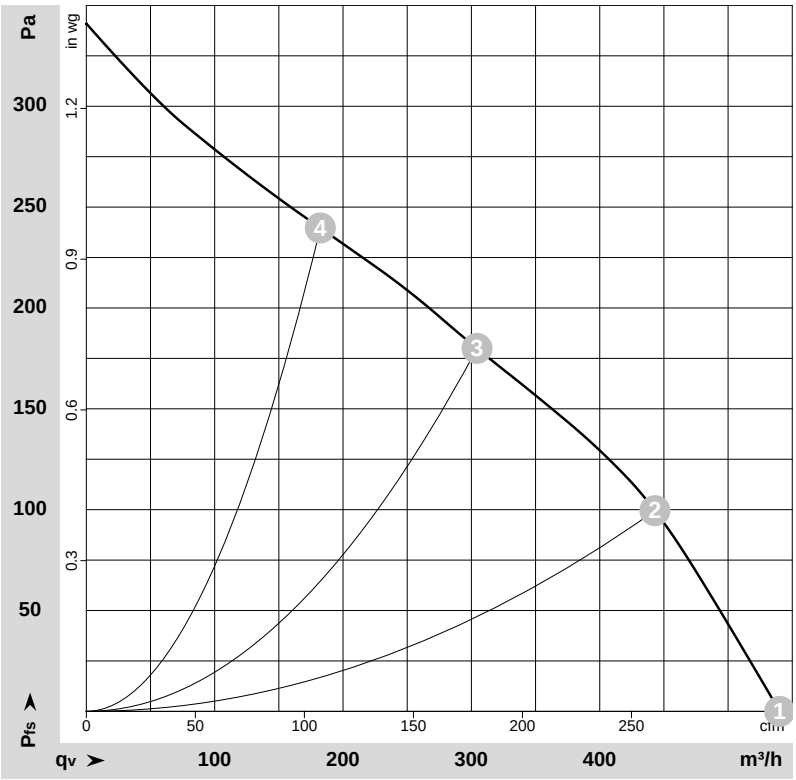

ρ = 1.15 kg/m³ ± 2 %

Measurement: LU-125749-1

Air performance measured according to ISO 5801 installation category A. For detailed information on the measurement setup, contact ebm-papst. Intake sound level: Sound power level according to ISO 13347 / sound pressure level measured at 1 m distance from fan axis. The values given are valid under the specified measuring conditions and may vary due to conditions of installation. For deviations from the standard configuration, the parameters have to be checked on the installed unit.

Measured values

	U	f	n	P_e	I	LpA_{in}	LwA_{in}	q_V	p_{fs}	q_V	p_{fs}
	V	Hz	min^{-1}	W	A	dB(A)	dB(A)	m^3/h	Pa	cfm	in. wg
1	230	50	2490	47	0.21	58	66	540	0	320	0.00
2	230	50	2440	50	0.22	55	63	445	100	260	0.40
3	230	50	2350	52	0.23	52	60	305	180	180	0.72
4	230	50	2450	49	0.22	55	62	180	240	105	0.96

U = Voltage · f = Frequency · n = Speed (rpm) · P_e = Power consumption · I = Current draw · LpA_{in} = Sound pressure level intake side · LwA_{in} = Sound power level intake side
q_V = Air flow · p_{fs} = Pressure increase

AC centrifugal fan - RadiCal

backward-curved, single-intake

Curves: Air performance 60 Hz

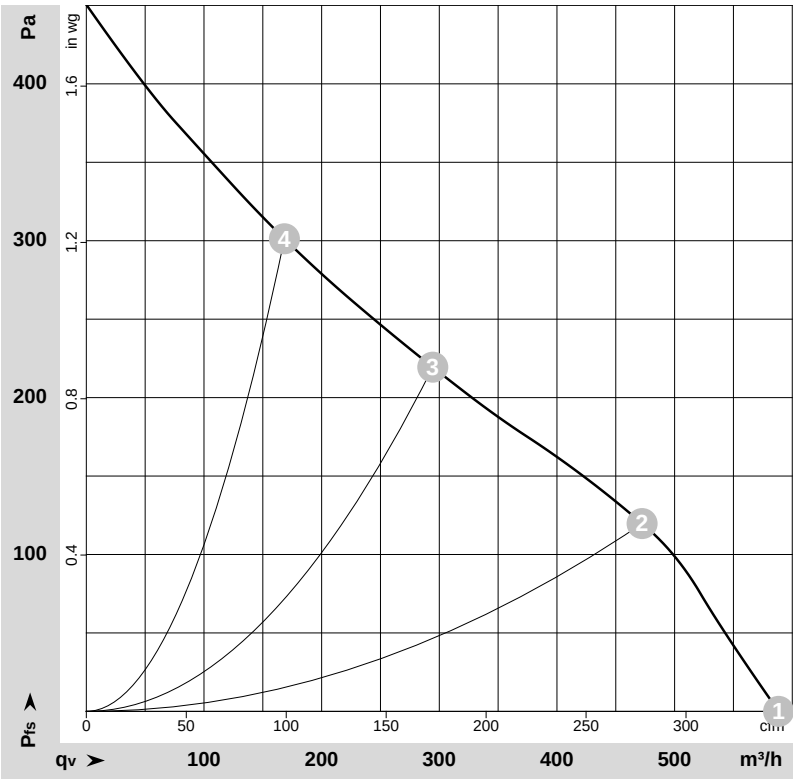

ρ = 1.15 kg/m³ ± 2 %

Measurement: LU-125753-1

Air performance measured according to ISO 5801 installation category A. For detailed information on the measurement setup, contact ebm-papst. Intake sound level: Sound power level according to ISO 13347 / sound pressure level measured at 1 m distance from fan axis. The values given are valid under the specified measuring conditions and may vary due to conditions of installation. For deviations from the standard configuration, the parameters have to be checked on the installed unit.

Measured values

	U	f	n	P_e	I	LpA_{in}	LwA_{in}	q_V	p_{fs}	q_V	p_{fs}
	V	Hz	min^{-1}	W	A	dB(A)	dB(A)	m^3/h	Pa	cfm	in. wg
1	230	60	2715	60	0.26	60	68	590	0	345	0.00
2	230	60	2630	62	0.27	58	65	470	120	280	0.48
3	230	60	2500	65	0.29	54	61	295	220	175	0.88
4	230	60	2705	60	0.27	59	66	170	300	100	1.20

U = Voltage · f = Frequency · n = Speed (rpm) · P_e = Power consumption · I = Current draw · LpA_{in} = Sound pressure level intake side · LwA_{in} = Sound power level intake side
q_V = Air flow · p_{fs} = Pressure increase

ebmpapst