R3G190-RC05-20

EC centrifugal fan

backward-curved, single-intake

ebm-papst Mulfingen GmbH & Co. KG
Bachmühle 2 · D-74673 Mulfingen
Phone +49 7938 81-0
Fax +49 7938 81-110
info1@de.ebmpapst.com
www.ebmpapst.com

Nominal data

Type	**R3G190-RC05-20**
Motor	**M3G055-BI**

Phase		1~
Nominal voltage	VAC	230
Nominal voltage range	VAC	200 .. 240
Frequency	Hz	50/60
Method of obtaining data		ml
Speed (rpm)	min^{-1}	3200
Power consumption	W	83
Current draw	A	0.75
Min. ambient temperature	°C	-25
Max. ambient temperature	°C	60

ml = Max. load · me = Max. efficiency · fa = Free air · cs = Customer specification · ce = Customer equipment
Subject to change

EC centrifugal fan

backward-curved, single-intake

Technical description

Weight	1.2 kg
Fan size	190 mm
Rotor surface	Thick-film passivated
Electronics housing material	Die-cast aluminum
Impeller material	PA plastic
Number of blades	7
Direction of rotation	Clockwise, viewed toward rotor
Degree of protection	IP54
Insulation class	"B"
Max. permitted ambient temp. for motor (transport/storage)	+ 80 °C
Min. permitted ambient temp. for motor (transport/storage)	- 40 °C
Installation position	Any
Condensation drainage holes	None, open rotor
Mode	S1
Motor bearing	Ball bearing
Technical features	- Output 10 VDC, max. 1.1 mA - Tach output - Power limiter - Motor current limitation - Soft start - Control input 0-10 VDC / PWM - Control interface with SELV potential safely disconnected from the mains - Overvoltage detection - Thermal overload protection for electronics/motor - Line undervoltage detection
EMC immunity to interference	According to EN 61000-6-2 (industrial environment)
EMC circuit feedback	According to EN 61000-3-2/3
EMC interference emission	According to EN 61000-6-3 (household environment), on account of the installation conditions, ferritic damping in the cable may be required for the application.
Touch current according to IEC 60990 (measuring circuit Fig. 4, TN system)	<= 3.5 mA
Electrical hookup	With plug
Motor protection	Locked-rotor protection
With cable	Variable
Protection class	I (with customer connection of protective earth)
Conformity with standards	EN 60335-1; CE

ebmpapst

EC centrifugal fan

backward-curved, single-intake

Product drawing

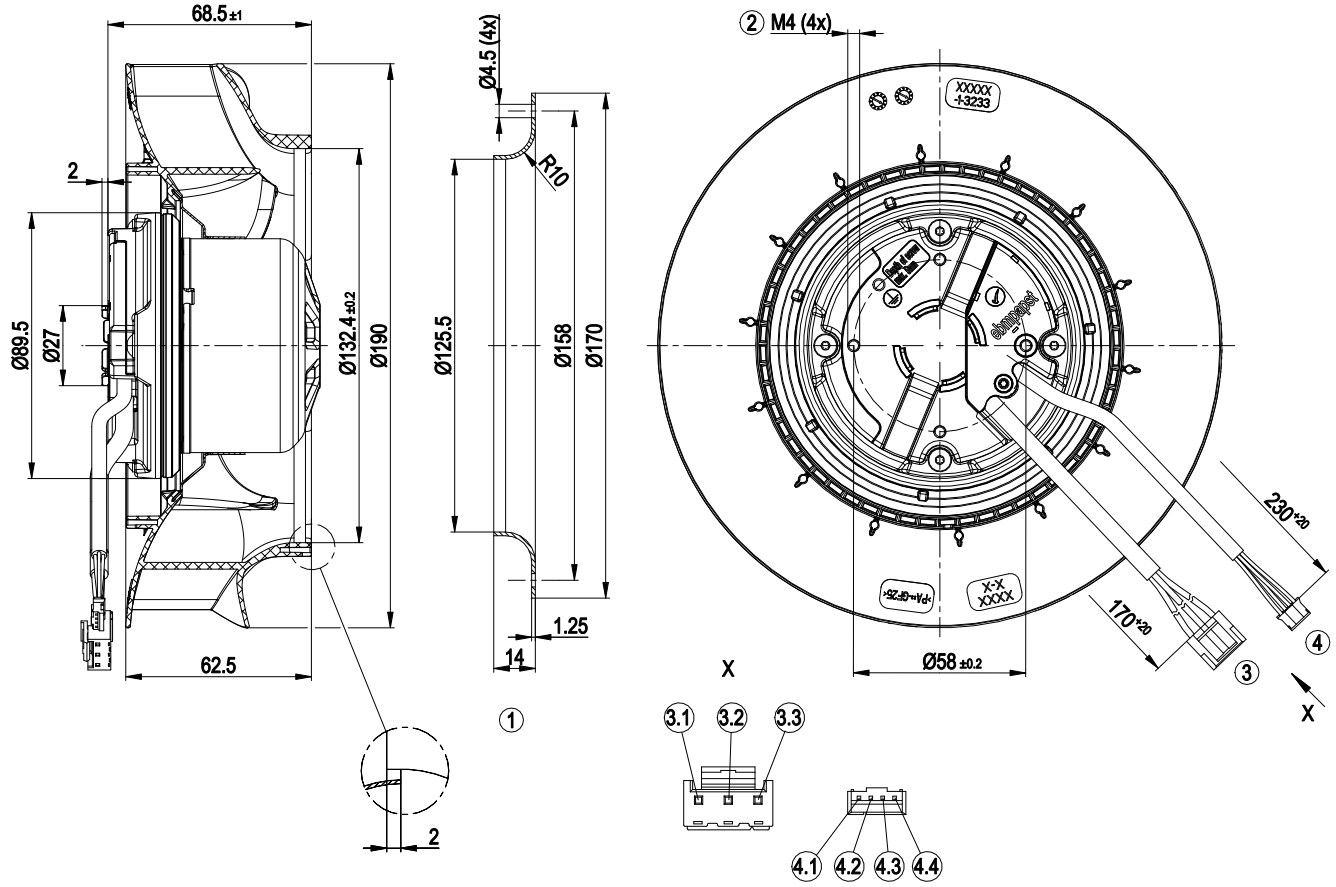

1	Accessory part: inlet ring 09576-2-4013 not included in scope of delivery
2	Max. clearance for screw 5 mm
3	Cable PVC AWG20, 3-pole connector housing JST NVR-03, 3x crimped socket JST SVH-21T
3.1	N (blue)
3.2	PE (green/yellow)
3.3	L (black)
4	Cable PVC AWG22, 4-pole connector housing JST PHR-4, 4x crimped socket SPH-002T
4.1	Tach (white)
4.2	0-10 V (yellow)
4.3	GND (blue)
4.4	+10 V (red)

EC centrifugal fan

backward-curved, single-intake

Connection diagram

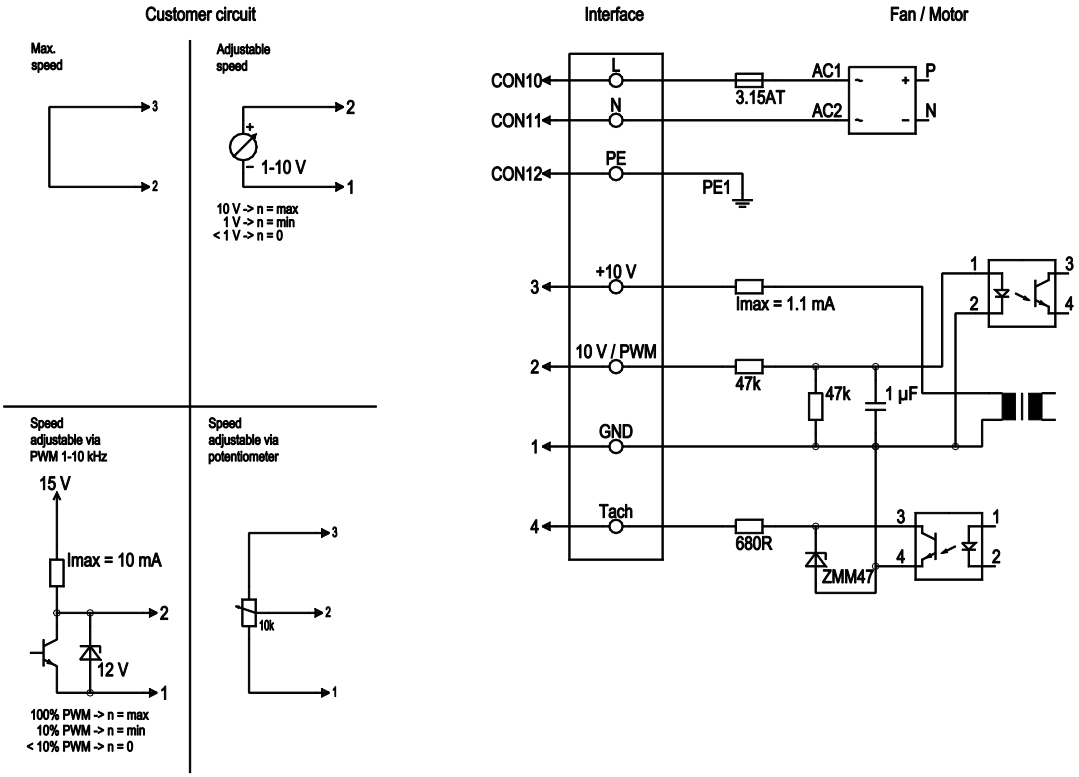

No.	Conn.	Designation	Color	Function/assignment
	CON10	L	black	Power supply 230 VAC, 50-60 Hz, see nameplate for voltage range
	CON11	N	blue	Neutral conductor
	CON12	PE	green/yellow	Protective earth
	1	GND	blue	GND connection for control interface
	2	0-10V PWM	yellow	Control input 0-10 V or PWM, electrically isolated
	3	10 V / max. 1,1 mA	red	Voltage output 10 VDC 1.1 mA, electrically isolated, short-circuit-proof
	4	Tacho	white	Tach output: open collector, 1 pulse per revolution, electrically isolated

EC centrifugal fan

backward-curved, single-intake

Curves: Air performance 50 Hz

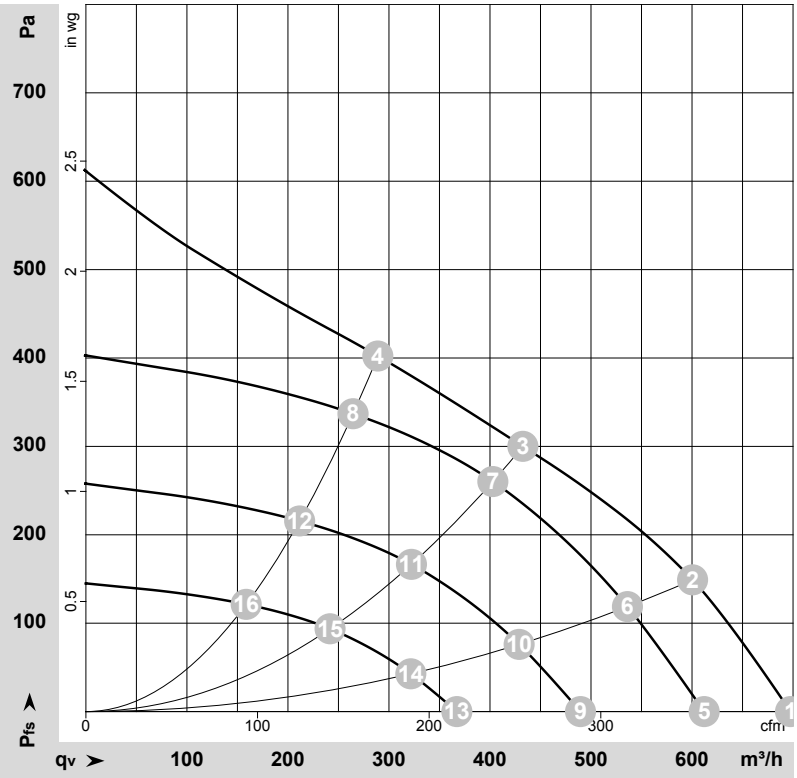

ρ = 1.15 kg/m³ ± 2 %

Measurement: LU-171430-1

Air performance measured according to ISO 5801 installation category A. For detailed information on the measurement setup, contact ebm-papst. Intake sound level: Sound power level according to ISO 13347 / sound pressure level measured at 1 m distance from fan axis. The values given are valid under the specified measuring conditions and may vary due to conditions of installation. For deviations from the standard configuration, the parameters have to be checked on the installed unit.

Measured values

	U	f	n	P_{ed}	I	LpA_{in}	LwA_{in}	q_V	p_{fs}	q_V	p_{fs}
	V	Hz	min^{-1}	W	A	dB(A)	dB(A)	m³/h	Pa	cfm	inH2O
1	230	50	3420	75	0.67	66	73	695	0	410	0.00
2	230	50	3360	79	0.70	60	68	600	150	355	0.60
3	230	50	3200	83	0.75	58	66	435	300	255	1.20
4	230	50	3275	83	0.73	60	69	290	400	170	1.61
5	230	50	3000	51	0.45			610	0	360	0.00
6	230	50	3000	56	0.50			535	119	315	0.48
7	230	50	3000	69	0.60			405	261	235	1.05
8	230	50	3000	64	0.56			265	337	155	1.35
9	230	50	2400	26	0.23			490	0	290	0.00
10	230	50	2400	29	0.26			430	76	250	0.31
11	230	50	2400	35	0.31			320	167	190	0.67
12	230	50	2400	33	0.29			210	216	125	0.87
13	230	50	1800	11	0.10			365	0	215	0.00
14	230	50	1800	12	0.11			320	43	190	0.17
15	230	50	1800	15	0.13			240	94	140	0.38
16	230	50	1800	14	0.12			160	121	95	0.49

U = Power supply · f = Frequency · n = Speed (rpm) · P_{ed} = Power consumption · I = Current draw · LpA_{in} = Sound pressure level intake side · LwA_{in} = Sound power level intake side
q_V = Air flow · p_{fs} = Pressure increase

ebmpapst