R3G190-RG19-21

EC centrifugal fan - RadiCal

backward-curved, single-intake

ebm-papst Mulfingen GmbH & Co. KG
Bachmühle 2 · D-74673 Mulfingen
Phone +49 7938 81-0
Fax +49 7938 81-110
info1@de.ebmpapst.com
www.ebmpapst.com

Nominal data

Type	**R3G190-RG19-21**
Motor	**M3G055-CF**

Phase		1~
Nominal voltage	VAC	230
Nominal voltage range	VAC	200 .. 240
Frequency	Hz	50/60
Method of obtaining data		ml
Speed (rpm)	min^{-1}	3374
Power consumption	W	96
Current draw	A	0.8
Min. ambient temperature	°C	-25
Max. ambient temperature	°C	60

ml = Max. load · me = Max. efficiency · fa = Free air · cs = Customer specification · ce = Customer equipment
Subject to change

EC centrifugal fan - RadiCal

backward-curved, single-intake

Technical description

Weight	1.4 kg
Fan size	190 mm
Rotor surface	Thick-film passivated
Impeller material	PA plastic
Number of blades	7
Direction of rotation	Clockwise, viewed toward rotor
Degree of protection	IP54
Insulation class	"B"
Max. permitted ambient temp. for motor (transport/storage)	+ 80 °C
Min. permitted ambient temp. for motor (transport/storage)	- 40 °C
Installation position	Any
Condensation drainage holes	None, open rotor
Mode	S1
Motor bearing	Ball bearing
Technical features	- Power limiter - Motor current limitation - Soft start - Control input 0-10 VDC / PWM - Control interface with SELV potential safely disconnected from the mains - Overvoltage detection - Thermal overload protection for electronics/motor - Line undervoltage detection
EMC immunity to interference	According to EN 61000-6-2 (industrial environment)
EMC circuit feedback	According to EN 61000-3-2/3
EMC interference emission	According to EN 61000-6-3 (household environment)
Touch current according to IEC 60990 (measuring circuit Fig. 4, TN system)	<= 3.5 mA
Electrical hookup	With plug
Motor protection	Locked-rotor protection
With cable	Variable
Protection class	I (with customer connection of protective earth)
Conformity with standards	EN 60335-1; CE

ebmpapst

EC centrifugal fan - RadiCal

backward-curved, single-intake

Product drawing

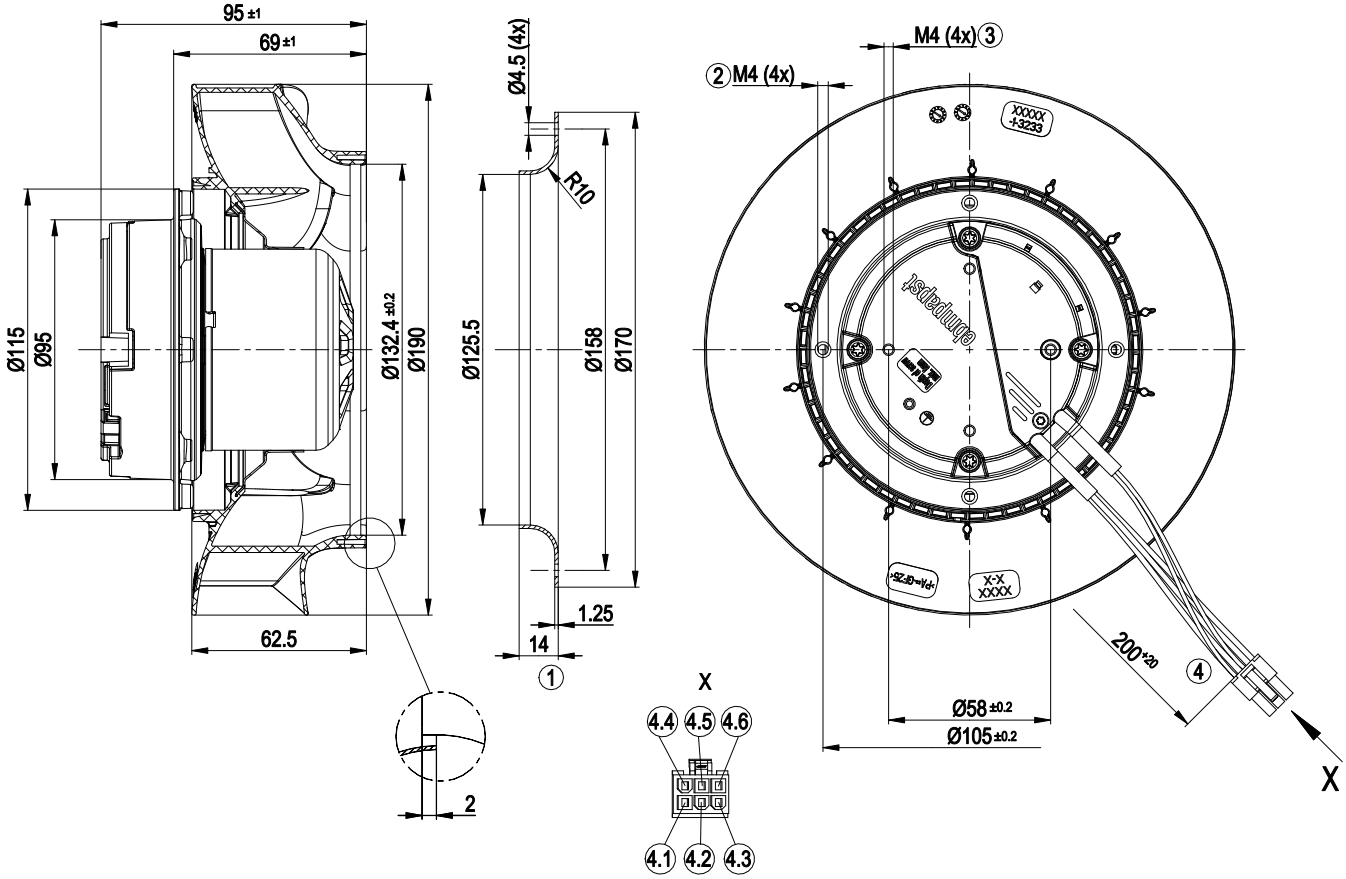

1	Accessory part: inlet ring 09576-2-4013 not included in scope of delivery
2	Max. clearance for screw 6 mm
3	Max. clearance for screw 6 mm
4	Cable PVC 3G 0.5 mm², cable 2x 0.25 mm², 6-pole connector housing tyco 1586765-6, 5x socket tyco 1586315-1
4.1	brown
4.2	blue
4.3	green/yellow
4.4	0-10 V PWM (yellow)
4.5	GND (blue)
4.6	not used

EC centrifugal fan - RadiCal

backward-curved, single-intake

Connection diagram

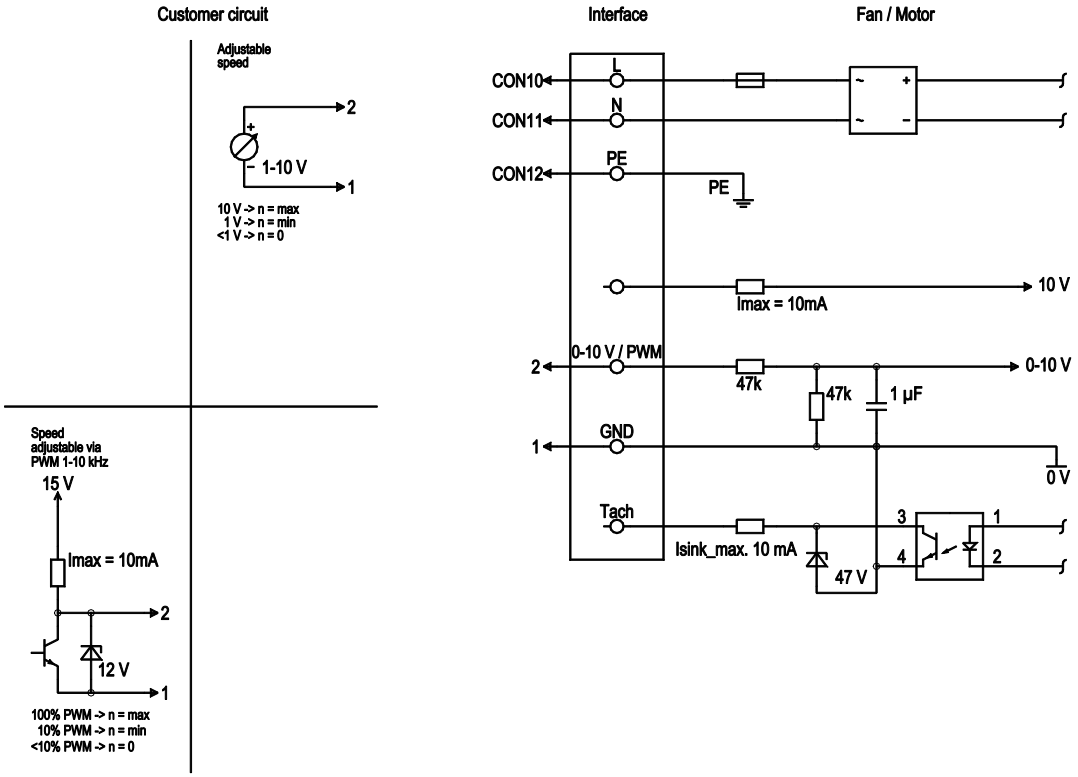

No.	Conn.	Designation	Color	Function/assignment
	CON10	L	brown	Supply connection, power supply, phase, see nameplate for voltage range
	CON11	N	blue	Supply connection, power supply, neutral conductor, see nameplate for voltage range
	CON12	PE	green/yellow	Ground connection
	2	0- 10V PWM	yellow	0-10 V / PWM control input, Ri=100 kΩ, SELV
	1	GND	blue	Reference ground for control interface, SELV

EC centrifugal fan - RadiCal

backward-curved, single-intake

Curves: Air performance 50 Hz

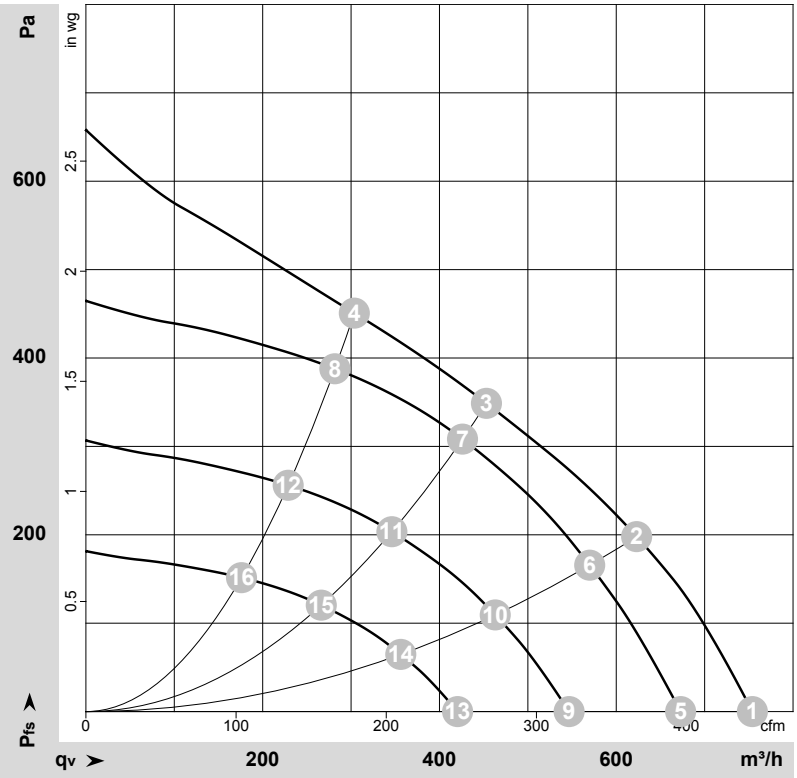

ρ = 1.15 kg/m³ ± 2 %

Measurement: LU-170599-1

Air performance measured according to ISO 5801 installation category A. For detailed information on the measurement setup, contact ebm-papst. Intake sound level: Sound power level according to ISO 13347 / sound pressure level measured at 1 m distance from fan axis. The values given are valid under the specified measuring conditions and may vary due to conditions of installation. For deviations from the standard configuration, the parameters have to be checked on the installed unit.

Measured values

	U	f	n	P_{ed}	I	qv	p_{fs}	qv	p_{fs}
	V	Hz	min^{-1}	W	A	m^3/h	Pa	CFM	inH2O
1	230	50	3585	84	0.72	755	0	445	0.00
2	230	50	3500	90	0.77	625	200	365	0.80
3	230	50	3375	96	0.80	455	350	265	1.41
4	230	50	3450	93	0.80	305	450	180	1.81
5	230	50	3200	59	0.51	675	0	395	0.00
6	230	50	3200	68	0.59	570	166	335	0.67
7	230	50	3200	81	0.69	425	308	250	1.24
8	230	50	3200	75	0.64	280	388	165	1.56
9	230	50	2600	32	0.27	545	0	320	0.00
10	230	50	2600	37	0.31	465	110	275	0.44
11	230	50	2600	43	0.37	345	204	205	0.82
12	230	50	2600	40	0.34	230	256	135	1.03
13	230	50	2000	15	0.12	420	0	250	0.00
14	230	50	2000	17	0.14	355	65	210	0.26
15	230	50	2000	20	0.17	265	120	155	0.48
16	230	50	2000	18	0.16	175	152	105	0.61

U = Power supply · f = Frequency · n = Speed (rpm) · P_{ed} = Power consumption · I = Current draw · qv = Air flow · p_{fs} = Pressure increase

ebmpapst