R3G310-AX52-90

EC centrifugal fan

backward-curved, single-intake

ebm-papst Mulfingen GmbH & Co. KG
Bachmühle 2 · D-74673 Mulfingen
Phone +49 7938 81-0
Fax +49 7938 81-110
info1@de.ebmpapst.com
www.ebmpapst.com

Nominal data

Type	**R3G310-AX52-90**
Motor	**M3G112-EA**

Phase		3~
Nominal voltage	VAC	400
Nominal voltage range	VAC	380 .. 480
Frequency	Hz	50/60
Method of obtaining data		ml
Speed (rpm)	min^{-1}	2580
Power consumption	W	1000
Current draw	A	1.63
Min. ambient temperature	°C	-25
Max. ambient temperature	°C	60

ml = Max. load · me = Max. efficiency · fa = Free air · cs = Customer specification · ce = Customer equipment
Subject to change

Data according to Commission Regulation (EU) 327/2011 (EN 17166)

		Actual	Req. 2015
01 Overall efficiency η_{es}	%	63.3	51.6
02 Measurement category		A	
03 Efficiency category		Static	
04 Efficiency grade N		73.7	62
05 Variable speed drive		Yes	

09 Power consumption P_{ed}	kW	1.02
09 Air flow q_v	m³/h	3040
09 Pressure increase p_{fs}	Pa	704
10 Speed (rpm) n	min^{-1}	2590
11 Specific ratio*		1.01

Data obtained at optimum efficiency level.

* Specific ratio = 1 + p_{fs} / 100 000 Pa

LU-164066

The efficiency values displayed for achieving conformity with the Ecodesign Regulation EU 327/2011 has been reached with defined air duct components (e.g. inlet rings).
The dimensions must be requested from ebm-papst. If other air conduction geometries are used on the installation side, the ebm-papst evaluation loses its validity/the conformity must be confirmed again.

The product does not fall within the scope of Regulation (EU) 2019/1781 due to the exception specified in Article 2 (2a) (motors completely integrated into a product).

EC centrifugal fan

backward-curved, single-intake

Technical description

Weight	8.8 kg
Size	310 mm
Motor size	112
Rotor surface	Painted black
Electronics housing material	Die-cast aluminum
Impeller material	Sheet aluminum
Number of blades	7
Direction of rotation	Clockwise, viewed toward rotor
Degree of protection	IP54
Insulation class	"B"
Moisture (F) / Environmental (H) protection class	H1
Max. permitted ambient temp. for motor (transport/storage)	+80 °C
Min. permitted ambient temp. for motor (transport/storage)	-40 °C
Installation position	Shaft horizontal or rotor on bottom; rotor on top on request
Condensation drainage holes	On rotor side
Mode	S1
Motor bearing	Ball bearing
Technical features	- Output 10 VDC, max. 10 mA - Output 20 VDC, max. 50 mA - Output for slave 0-10 V - Input for sensor 0-10 V or 4-20 mA - External 24 V input (parameter setting) - Alarm relay - Integrated PI controller - Motor current limitation - PFC, passive - RS-485 MODBUS-RTU - Soft start - Control input 0-10 VDC / PWM - Control interface with SELV potential safely disconnected from the mains - Thermal overload protection for electronics/motor - Line undervoltage / phase failure detection
EMC immunity to interference	According to EN 61000-6-2
EMC circuit feedback	According to EN 61000-3-2/3
EMC interference emission	According to EN 61000-6-4 (industrial environment)
Touch current according to IEC 60990 (measuring circuit Fig. 4, TN system)	<= 3.5 mA
Electrical hookup	Terminal box
Motor protection	Thermal overload protector (TOP) internally connected
Protection class assignment	I; If a protective earth is connected by the customer This component for installation may have several local protection classes. This information relates to this component's basic design. The final protection class is based on the component's intended installation and connection.
Conformity with standards	EN 61800-5-1; CE; UKCA

ebmpapst

Approval	CCC; EAC; UL 1004-7 + 60730-1

EC centrifugal fan

backward-curved, single-intake

Product drawing

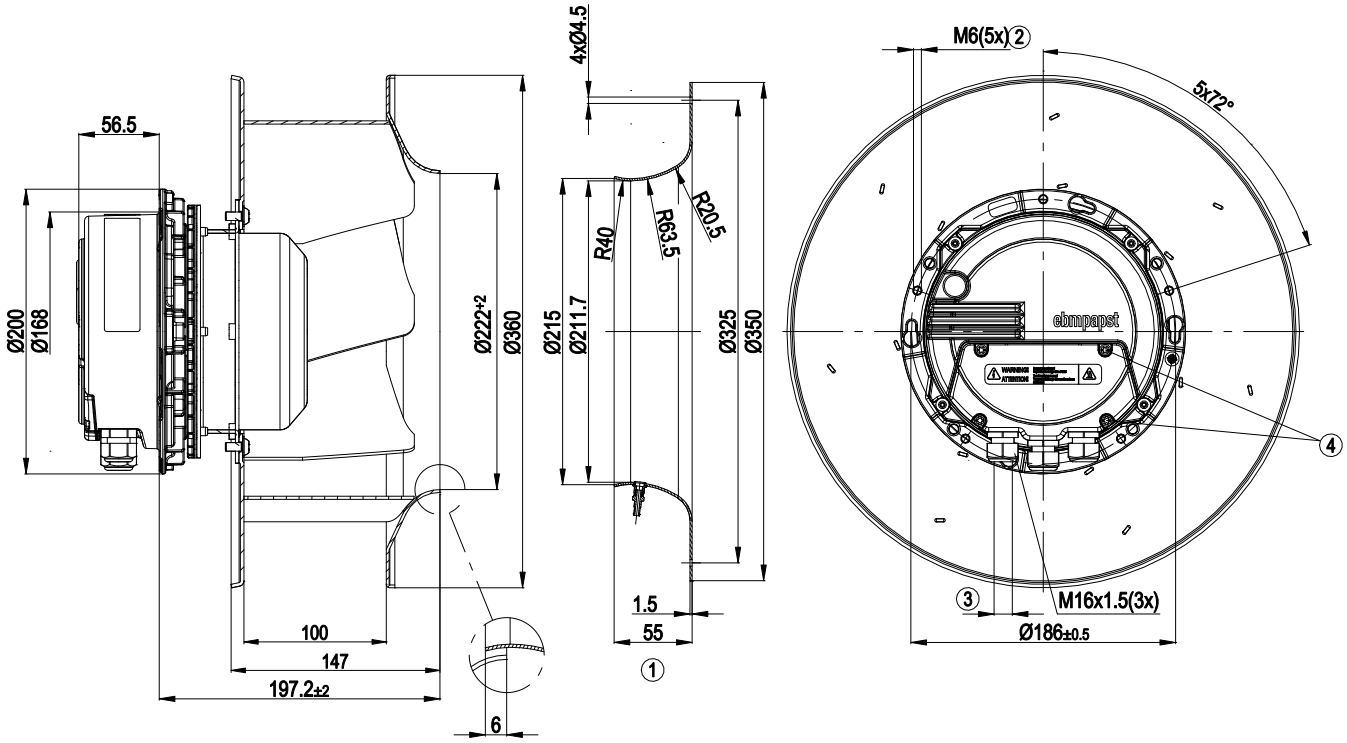

1	Accessory part: inlet ring 31575-2-4013 with pressure tap (k-factor 116) not included in scope of delivery
2	Max. clearance for screw 16 mm
3	Cable diameter min. 4 mm, max. 10 mm; tightening torque 2.5 ± 0.4 Nm
4	Tightening torque 3.5 ± 0.5 Nm

EC centrifugal fan

backward-curved, single-intake

Connection diagram

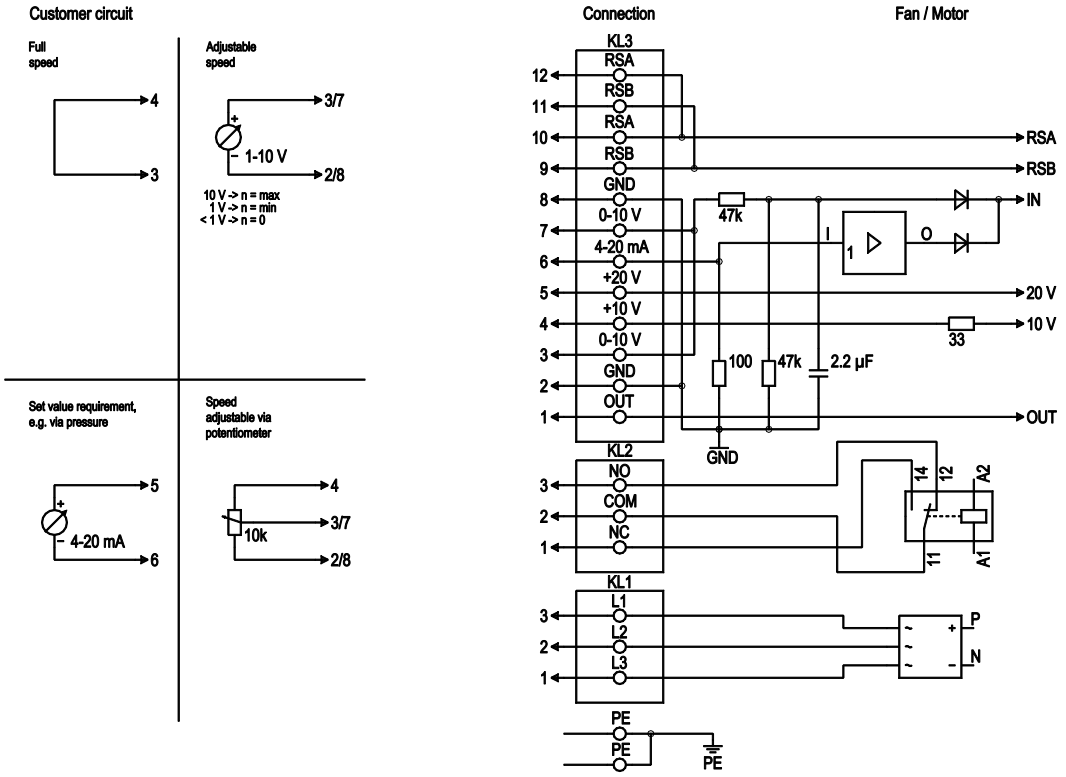

No.	Conn.	Designation	Function/assignment
PE		PE	Protective earth terminal
KL1	1, 2, 3	L1, L2, L3	Power supply, voltage range (see nameplate), 50/60 Hz
KL2	1	NC	Floating status contact, break for failure
KL2	2	COM	floating status contact, changeover contact, common connection (2 A, max. 250 VAC, min. 10 mA, AC1)
KL2	3	NO	Floating status contact, make for failure
KL3	1	OUT	Analog output, 0-10 VDC, max. 3 mA, SELV, output of current motor modulation level: 1 V corresponds to 10% modulation level. 10 V corresponds to 100% modulation level.
KL3	2, 8	GND	Reference ground for control interface, SELV
KL3	3, 7	0-10 V	Use control / current sensor value input 0-10 VDC, impedance 100 kΩ only as alternative to 4-20 mA input, SELV
KL3	4	+10 V	Voltage output 10 VDC (±3%), max. 10 mA, power supply for external devices (e.g. potentiometer), SELV
KL3	5	+20 V	Voltage output 20 VDC (+25%/-10%), max. 50 mA, power supply for external devices (e.g. sensors), SELV
KL3	6	4-20 mA	Use control / current sensor value input 4-20 mA, impedance 100 Ω only as alternative to 0-10 V input, SELV
KL3	9, 11	RSB	RS485 interface for MODBUS, RSB
KL3	10, 12	RSA	RS485 interface for MODBUS, RSA

ebmpapst

EC centrifugal fan

backward-curved, single-intake

Curves: Air performance 50 Hz

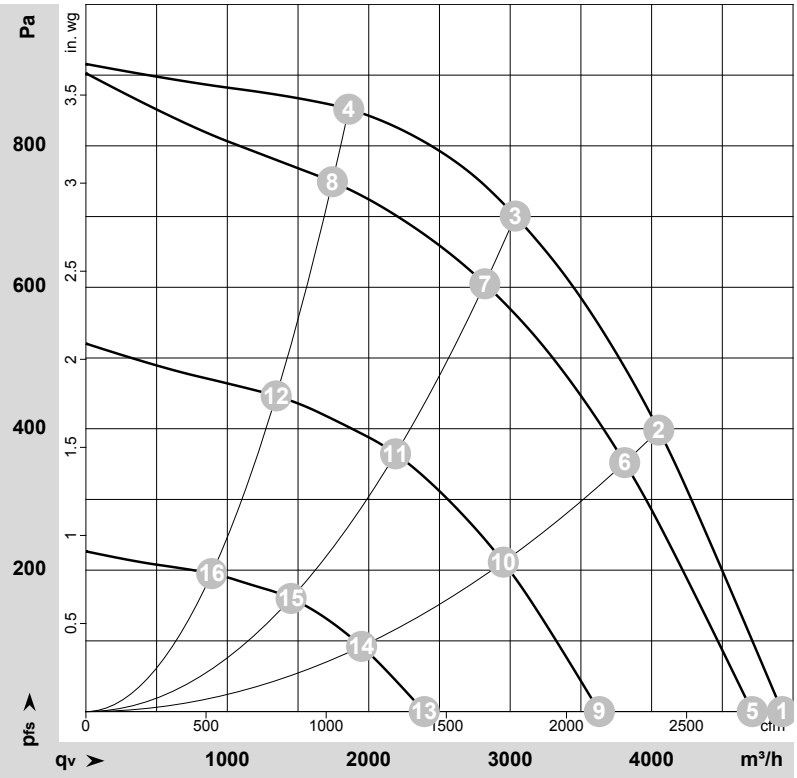

ρ = 1.15 kg/m³ ± 2 %

Measurement: LU-164066-1

Air performance measured according to ISO 5801 installation category A. For detailed information on the measurement setup, contact ebm-papst. Intake sound level: Sound power level according to ISO 13347 / sound pressure level measured at 1 m distance from fan axis. The values given are valid under the specified measuring conditions and may vary due to conditions of installation. For deviations from the standard configuration, the parameters have to be checked on the installed unit.

Measured values

	Wired	U	f	n	P_{ed}	I	LpA_{in}	LwA_{in}	LwA_{out}	q_V	p_{fs}	q_V	p_{fs}
		V	Hz	min^{-1}	W	A	dB(A)	dB(A)	dB(A)	m^3/h	Pa	cfm	in. wg
1	3~	400	50	2580	697	1.29	75	84	89	4925	0	2900	0.00
2	3~	400	50	2580	920	1.60	71	79	85	4050	400	2385	1.61
3	3~	400	50	2580	1000	1.63	70	78	84	3035	700	1785	2.81
4	3~	400	50	2580	899	1.59	73	81	86	1860	850	1095	3.41
5	3~	400	50	2490	615	1.17	75	84	89	4710	0	2775	0.00
6	3~	400	50	2435	775	1.43	69	77	84	3810	356	2240	1.43
7	3~	400	50	2405	833	1.51	68	76	83	2820	607	1660	2.44
8	3~	400	50	2440	748	1.39	71	79	85	1745	750	1025	3.01
9	3~	400	50	1915	302	0.62	68	76	81	3630	0	2135	0.00
10	3~	400	50	1885	374	0.75	63	71	78	2950	213	1735	0.86
11	3~	400	50	1870	406	0.81	63	70	77	2190	367	1290	1.47
12	3~	400	50	1885	363	0.73	65	72	78	1345	447	790	1.79
13	3~	400	50	1270	111	0.28	58	66	72	2390	0	1410	0.00
14	3~	400	50	1250	132	0.33	54	62	68	1950	93	1145	0.37
15	3~	400	50	1245	141	0.34	53	61	67	1450	160	855	0.64
16	3~	400	50	1250	128	0.31	54	62	68	890	195	525	0.78

Wired = Wiring · U = Voltage · f = Frequency · n = Speed (rpm) · P_{ed} = Power consumption · I = Current draw · LpA_{in} = Sound pressure level intake side · LwA_{in} = Sound power level intake side
LwA_{out} = Sound power level outlet side · q_V = Air flow · p_{fs} = Pressure increase

ebmpapst