R3G310-AX54-21

EC centrifugal fan - RadiPac

backward-curved, single-intake

ebm-papst Mulfingen GmbH & Co. KG
Bachmühle 2 · D-74673 Mulfingen
Phone +49 7938 81-0
Fax +49 7938 81-110
info1@de.ebmpapst.com
www.ebmpapst.com

Nominal data

Type	**R3G310-AX54-21**
Motor	**M3G112-EA**

Phase		1~
Nominal voltage	VAC	230
Nominal voltage range	VAC	200 .. 277
Frequency	Hz	50/60
Method of obtaining data		ml
Speed	min^{-1}	2850
Power consumption	W	1270
Current draw	A	5.6
Min. ambient temperature	°C	-25
Max. ambient temperature	°C	60

ml = Max. load · me = Max. efficiency · fa = Free air · cs = Customer specification · ce = Customer equipment
Subject to change

Data according to ErP Directive

		Actual	Req. 2015
01 Overall efficiency η_{es}	%	59.4	52.6
02 Measurement category		A	
03 Efficiency category		Static	
04 Efficiency grade N		68.8	62
05 Variable speed drive		Yes	

09 Power consumption P_{ed}	kW	1.27
09 Air flow q_v	m³/h	2790
09 Pressure increase p_{fs}	Pa	903
10 Speed n	min^{-1}	2840
11 Specific ratio*		1.01

Data obtained at optimum efficiency level.
The ErP data is determined using a motor-impeller combination in a standardized measurement setup.

* Specific ratio = 1 + p_{fs} / 100 000 Pa

LU-126020

EC centrifugal fan - RadiPac

backward-curved, single-intake

Technical description

Weight	11 kg
Fan size	310 mm
Rotor surface	Painted black
Electronics housing material	Die-cast aluminum
Impeller material	Sheet aluminum
Number of blades	7
Direction of rotation	Clockwise, viewed toward rotor
Degree of protection	IP54
Insulation class	"B"
Moisture (F) / Environmental (H) protection class	F4-1
Max. permitted ambient temp. for motor (transport/storage)	+80 °C
Min. permitted ambient temp. for motor (transport/storage)	-40 °C
Installation position	Shaft horizontal or rotor on bottom; rotor on top on request
Condensation drainage holes	On rotor side
Mode	S1
Motor storage	Ball bearing
Technical features	- RS-485 MODBUS-RTU - Control input 0-10 VDC / PWM - Tach output - Thermal overload protection for electronics/motor - Alarm relay - PFC, active - Integrated PID controller - Input for sensor 0-10 V or 4-20 mA - Output for slave 0-10 V - Motor current limitation - Soft start - Line undervoltage / phase failure detection - Output 10 VDC, max. 10 mA - Output 20 VDC, max. 50 mA
Touch current according to IEC 60990 (measuring circuit Fig. 4, TN system)	<= 3.5 mA
Electrical hookup	Via terminal box
Motor protection	Thermal overload protector (TOP) internally connected
With cable	Variable
Protection class	I (with customer connection of protective earth)
Conformity with standards	CE
Approval	EAC; UL 1004-7 + 60730

ebmpapst

EC centrifugal fan - RadiPac

backward-curved, single-intake

Product drawing

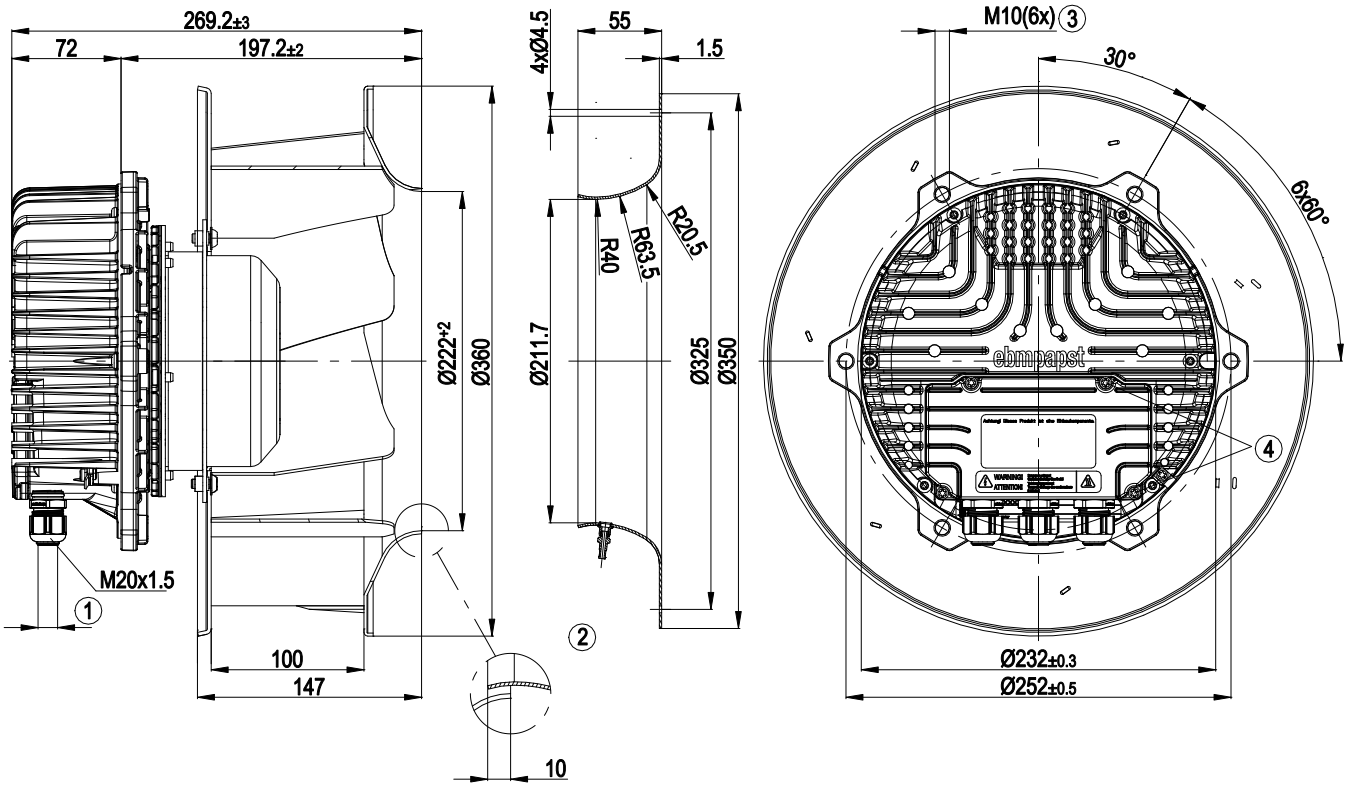

1	Cable diameter min. 4 mm, max. 10 mm; tightening torque 4 ± 0.6 Nm
2	Accessory part: inlet ring 31575-2-4013 not included in scope of delivery
3	Clearance for screw 12-16 mm
4	Tightening torque 3.5 ± 0.5 Nm

Connection diagram

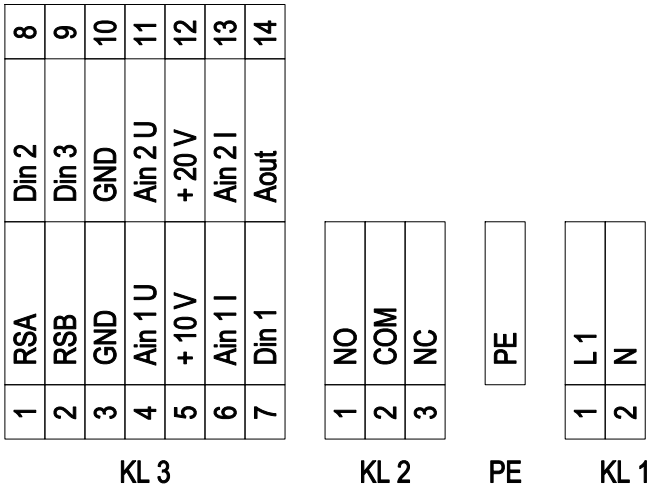

No.	Conn.	Designation	Function/assignment
KL1	1	L1	Supply connection, power supply 1-phase 200-277 VAC; 50/60 Hz
KL1	2	N	Supply connection, power supply 1-phase 200-277 VAC; 50/60 Hz
PE		PE	Ground connection, PE connection
KL2	1	NO	Status relay, floating status contact; Option 1: Make for failure; Option 2: Make for run monitoring error message
KL2	2	COM	Status relay, floating status contact; changeover contact; common connection; contact rating 250 VAC/ max. 2 A (AC1)/min. 10 mA
KL2	3	NC	Status relay, floating status contact; Option 1: Break for failure; Option 2: Break for run monitoring error message
KL3	1	RSA	Bus connection RS485; RSA; MODBUS RTU
KL3	2	RSB	Bus connection RS485; RSB; MODBUS RTU
KL3	3	GND	Reference ground for control interface
KL3	4	Ain1 U	Analog input 1 (set value); 0-10 V; Ri = 100 kohms; adjustable curve; only for use as alternative to input Ain1 I
KL3	5	+10 V	Fixed voltage output 10 VDC; +10 V ±3%; max. 10 mA; short-circuit-proof power supply for ext. devices (e.g. potentiometer)
KL3	6	Ain1 I	Analog input 1 (set value); 4-20 mA; Ri = 100 ohms; adjustable curve; only for use as alternative to input Ain1 U
KL3	7	Din1	Digital input 1: Enable electronics; Enable: Pin open or applied voltage 5...50 VDC; Disable: Bridge to GND or applied voltage < 0.8 VDC; Reset function: Triggering of software reset after level change to < 0.8 V
KL3	8	Din2	Digital input 2: Parameter set 1/2 switching; Depending on EEPROM setting, the valid/used parameter set can be selected via BUS or digital input DIN2. Parameter set 1: Pin open or applied voltage 5...50 VDC; Parameter set 2: Bridge to GND or applied voltage < 0.8 VDC
KL3	9	Din3	Digital input 3: Direction of action of integrated controller; According to EEPROM setting, the direction of action of the integrated controller can be selected as normal/inverse via bus or digital input; Normal: Pin open or applied voltage 5...50 VDC; Inverse: Bridge to GND or applied voltage < 0.8 VDC
KL3	10	GND	Reference ground for control interface
KL3	11	Ain2 U	Analog input 2; Measured value 0-10 V; Ri = 100 kohms; adjustable curve; only for use as alternative to input Ain2 I
KL3	12	+20 V	Fixed voltage output 20 VDC; +20 V +25/-10%; max. 50 mA; short-circuit-proof power supply for ext. devices (e.g. sensors)
KL3	13	Ain2 I	Analog input 2; measured value: 4-20 mA; Ri = 100 ohms; adjustable curve; only for use as alternative to input Ain2 U

No.	Conn.	Designation	Function/assignment
KL3	14	Aout	Analog output 0-10 V; max. 5 mA; output of current motor modulation level/of current motor speed Adjustable curve.

EC centrifugal fan - RadiPac

backward-curved, single-intake

Curves: Air performance 50 Hz

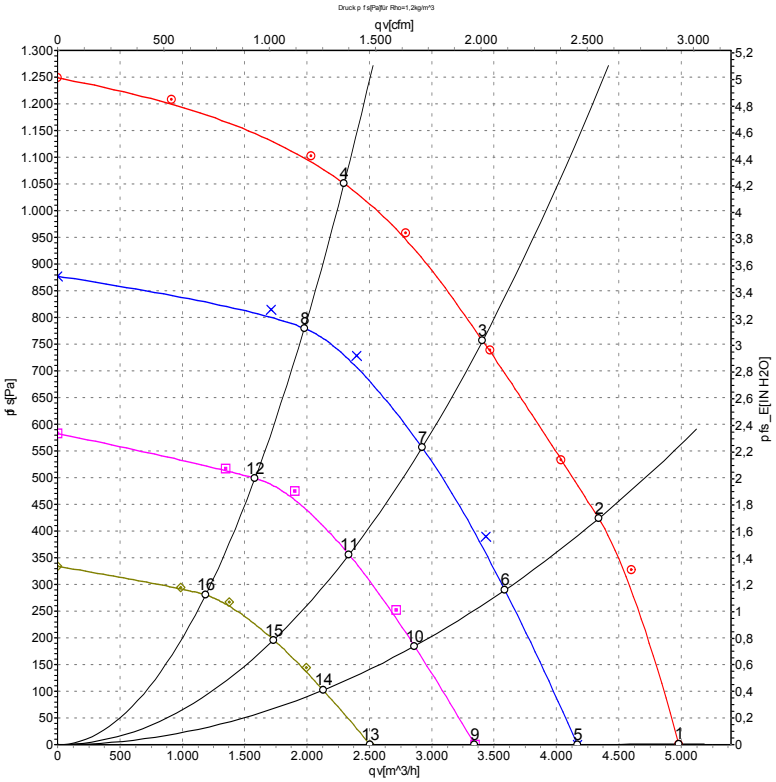

Measurement: LU-126020
Measurement: LU-131413
Measurement: LU-131415
Measurement: LU-131416

Air performance measured according to ISO 5801 installation category A. For detailed information on the measurement setup, contact ebm-papst. Intake sound level: Sound power level according to ISO 13347 / sound pressure level measured at 1 m distance from fan axis. The values given are valid under the specified measuring conditions and may vary due to conditions of installation. For deviations from the standard configuration, the parameters have to be checked on the installed unit.

Measured values

	U	f	n	P_{ed}	I	LpA_{in}	LwA_{in}	LwA_{out}	qv	p_{fs}
	V	Hz	min^{-1}	W	A	dB(A)	dB(A)	dB(A)	m^3/h	Pa
1	230	50	2930	946	4.14	81	88	94	4980	0
2	230	50	2895	1147	5.01	76	83	90	4340	425
3	230	50	2850	1270	5.60	72	79	87	3410	760
4	230	50	2850	1237	5.41	75	83	89	2300	1050
5	230	50	2430	529	2.34	77	84	89	4165	0
6	230	50	2430	663	2.91	71	78	85	3585	309
7	230	50	2430	743	3.26	70	77	84	2925	556
8	230	50	2430	751	3.29	71	78	85	1980	781
9	230	50	1955	299	1.36	71	78	83	3345	0
10	230	50	1955	360	1.61	66	73	79	2860	193
11	230	50	1955	398	1.77	65	72	78	2335	356
12	230	50	1955	400	1.78	66	73	79	1585	499
13	230	50	1465	139	0.72	64	71	76	2505	0
14	230	50	1465	159	0.79	59	67	73	2130	106
15	230	50	1465	177	0.86	58	65	72	1735	196
16	230	50	1465	184	0.89	59	66	73	1185	280

U = Power supply · f = Frequency · n = Speed · P_{ed} = Power consumption · I = Current draw · LpA_{in} = Sound pressure level intake side · LwA_{in} = Sound power level intake side
LwA_{out} = Sound power level outlet side · qv = Air flow · p_{fs} = Pressure increase

ebmpapst