R3G310-RR05-H2

EC centrifugal fan - RadiCal

backward-curved, single-intake

ebm-papst Mulfingen GmbH & Co. KGaA & Co. KG
Bachmühle 2 · D-74673 Mulfingen
Phone +49 7938 81-0
info1@de.ebmpapst.com
www.ebmpapst.com

Limited partnership · Headquarters Mulfingen
Amtsgericht (court of registration) Stuttgart · HRA 590344

General partner Elektrobau Mulfingen GmbH · Headquarters Mulfingen
Amtsgericht (court of registration) Stuttgart · HRB 590142

Nominal data

Type	**R3G310-RR05-H2**
Motor	**M3G084-DF**

Phase		1~
Nominal voltage	VAC	230
Nominal voltage range	VAC	200 .. 277
Frequency	Hz	50/60
Method of obtaining data		ml
Speed (rpm)	min^{-1}	2360
Power consumption	W	500
Current draw	A	2.2
Min. ambient temperature	°C	-25
Max. ambient temperature	°C	30

ml = Max. load · me = Max. efficiency · fa = Free air · cs = Customer specification · ce = Customer equipment
Subject to change

Data according to Commission Regulation (EU) 327/2011 (prEN 17166)

		Actual	Req. 2015
01 Overall efficiency η_{es}	%	65.4	48.6
02 Measurement category		A	
03 Efficiency category		Static	
04 Efficiency grade N		78.8	62
05 Variable speed drive		Yes	

09 Power consumption P_{ed}	kW	0.52
09 Air flow q_v	m³/h	2120
09 Pressure increase p_{fs}	Pa	529
10 Speed (rpm) n	min^{-1}	2355
11 Specific ratio*		1.01

Data obtained at optimum efficiency level.

* Specific ratio = 1 + p_{fs} / 100 000 Pa

LU-180958

The efficiency values displayed for achieving conformity with the Ecodesign Regulation EU 327/2011 has been reached with defined air duct components (e.g. inlet rings).
The dimensions must be requested from ebm-papst. If other air conduction geometries are used on the installation side, the ebm-papst evaluation loses its validity/the conformity must be confirmed again.

The product does not fall within the scope of Regulation (EU) 2019/1781 due to the exception specified in Article 2 (2a) (motors completely integrated into a product).

EC centrifugal fan - RadiCal

backward-curved, single-intake

Technical description

Weight	4.6 kg
Size	310 mm
Motor size	84
Rotor surface	Painted black
Electronics housing material	Die-cast aluminum
Impeller material	PP plastic
Number of blades	6
Direction of rotation	Clockwise, viewed toward rotor
Degree of protection	IP55
Insulation class	"F"
Moisture (F) / Environmental (H) protection class	H1 = Moist – occasional or constantly high level of humidity
Max. permitted ambient temp. for motor (transport/storage)	+80 °C
Min. permitted ambient temp. for motor (transport/storage)	-40 °C
Installation position	Shaft horizontal or rotor on bottom; rotor on top on request
Condensation drainage holes	On rotor side
Mode	S1
Motor bearing	Ball bearing
Technical features	- Output 10 VDC, max. 10 mA - Operation and alarm display - Alarm relay - Integrated PID controller - Power limiter - Motor current limitation - RS-485 MODBUS-RTU - Soft start - Control input 0-10 VDC / PWM - Control interface with SELV potential safely disconnected from the mains - Thermal overload protection for electronics/motor - Line undervoltage / phase failure detection
Power Factor Correction (PFC)	Active
EMC immunity to interference	According to EN 61000-6-2 (industrial environment)
EMC circuit feedback	According to EN 61000-3-2/3
EMC interference emission	According to EN 61000-6-3 (household environment)
Touch current according to IEC 60990 (measuring circuit Fig. 4, TN system)	<= 3.5 mA
Motor protection	Thermal switch auto reset, internally connected
With cable	Variable
Protection class assignment	I; If a protective earth is connected. The built-in component has several local protection class assignments. The final protection class is determined by the intended installation.
Conformity with standards	EN 61800-5-1; EN 60335-1; CE; UKCA
Approval	CSA C22.2 No. 77 + CAN/CSA-E60730-1; EAC; UL 1004-7 + 60730-1; CCC

ebm-papst Mulfingen GmbH & Co. KGaA & Co. KG · Bachmühle 2 · D-74673 Mulfingen · Phone +49 (0) 7938 81-0 · info1@de.ebmpapst.com · www.ebmpapst.com

EC centrifugal fan - RadiCal

backward-curved, single-intake

Product drawing

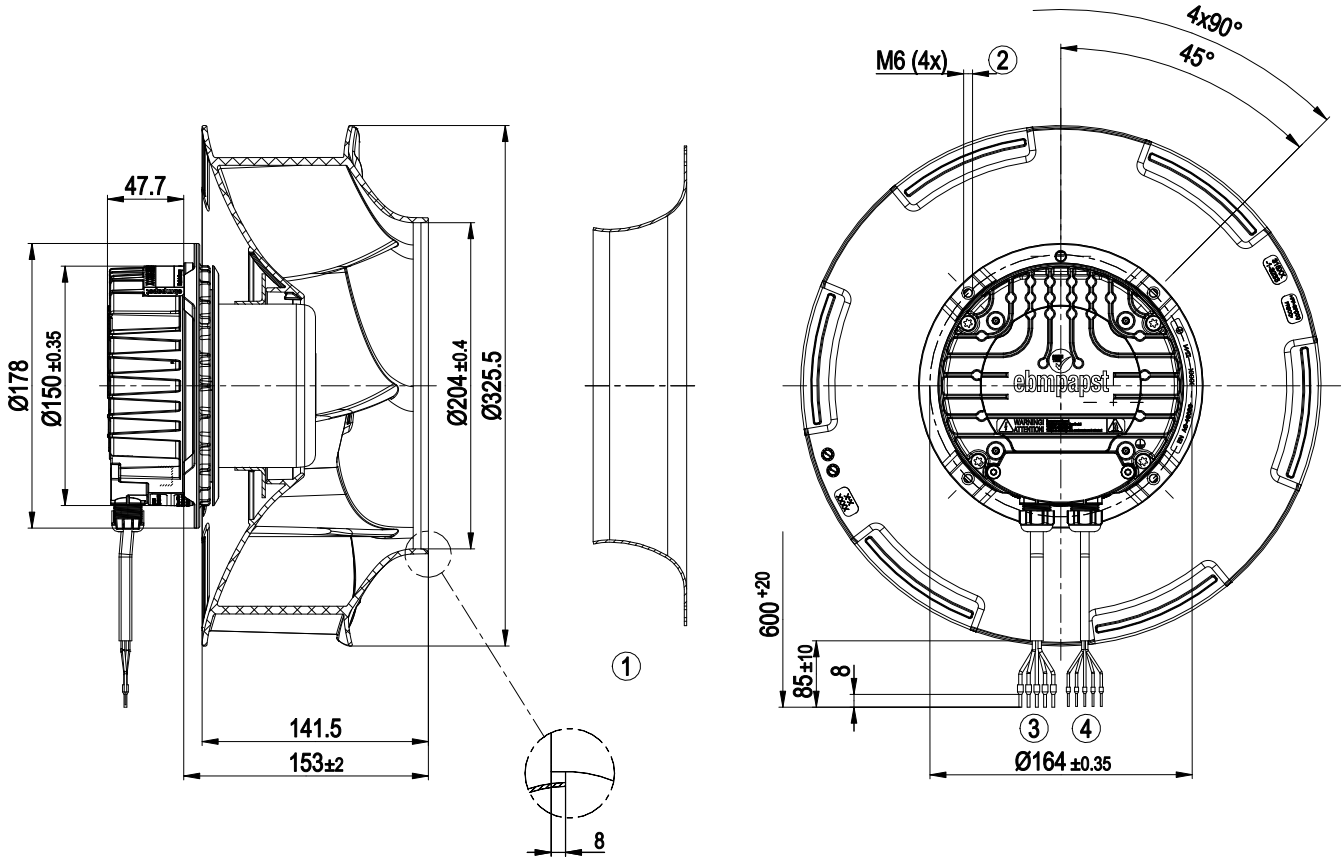

1	Accessory part: inlet ring 31000-2-4013 not included in scope of delivery
2	Max. clearance for screw 16 mm
3	Cable PVC AWG18
	5x wire-end ferrule
4	Cable PVC AWG22
	5x wire-end ferrule

ebm-papst Mulfingen GmbH & Co. KGaA & Co. KG · Bachmühle 2 · D-74673 Mulfingen · Phone +49 (0) 7938 81-0 · info1@de.ebmpapst.com · www.ebmpapst.com

EC centrifugal fan - RadiCal

backward-curved, single-intake

Accessory part

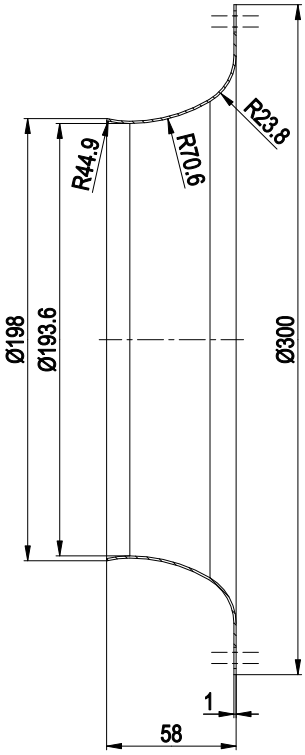

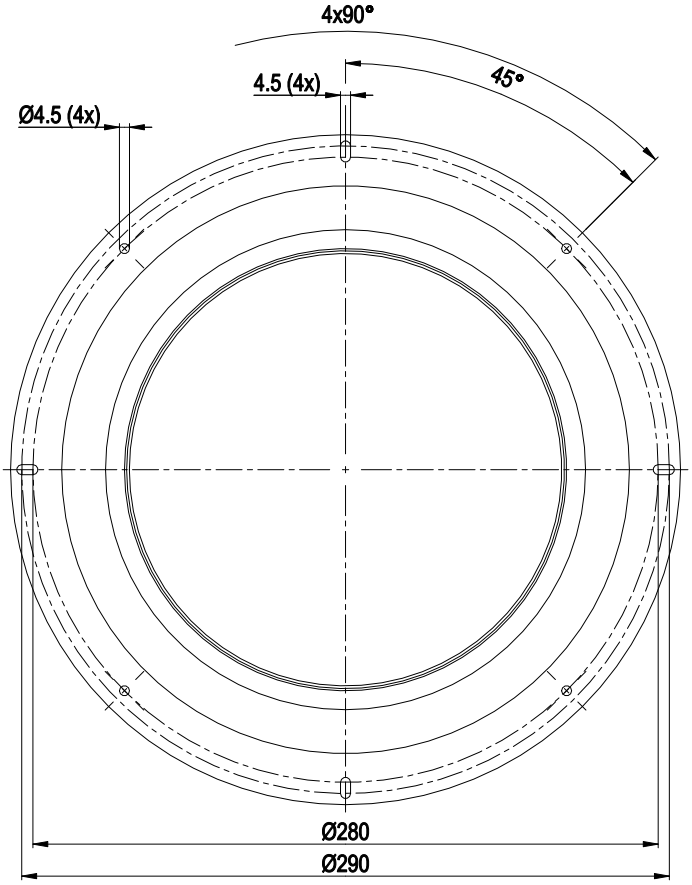

Inlet ring 31000-2-4013

ebm-papst Mulfingen GmbH & Co. KGaA & Co. KG · Bachmühle 2 · D-74673 Mulfingen · Phone +49 (0) 7938 81-0 · info1@de.ebmpapst.com · www.ebmpapst.com

EC centrifugal fan - RadiCal

backward-curved, single-intake

Connection diagram

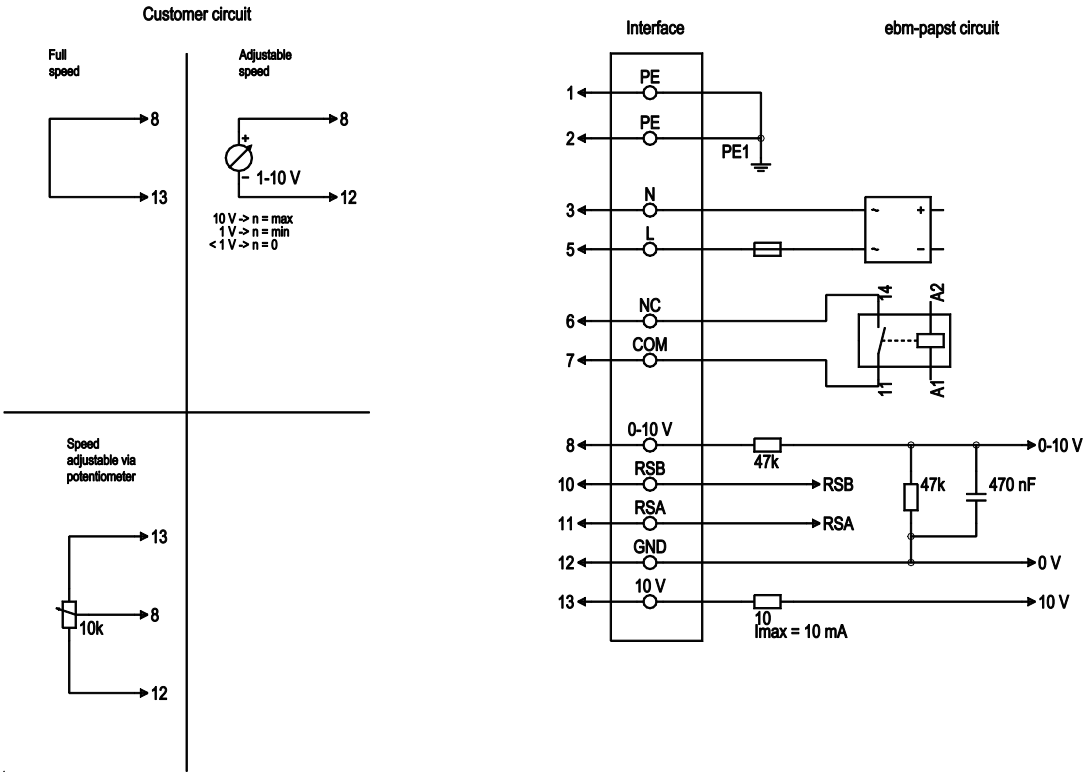

No.	Conn.	Designation	Color	Function/assignment
1	1, 2	PE	green/yellow	Protective earth
1	3	N	blue	Power supply, neutral conductor, 50/60 Hz
1	5	L	black	Power supply, phase, 50/60 Hz
1	6	NC	white 1	Status relay, floating status contact; break for failure, contact rating 250 VAC / 2A (AC1) / min. 10 mA, basic insulation on supply side and reinforced insulation on control interface side
1	7	COM	white 2	Status relay, floating status contact; common connection, contact rating 250 VAC / 2A (AC1) / min. 10 mA, basic insulation on supply side and reinforced insulation on control interface side
2	8	0-10V	yellow	Analog input (set value); 0-10 V; Ri = 100 kΩ; adjustable curve
2	10	RSB	brown	RS485 interface for MODBUS, RSB
2	11	RSA	white	RS485 interface for MODBUS, RSA
2	12	GND	blue	Reference ground for control interface, SELV
2	13	+10V	red	Fixed voltage output 10 VDC, +10 V ±3%; max. 10 mA; short-circuit-proof; power supply for external devices (e.g. pot)

ebm-papst Mulfingen GmbH & Co. KGaA & Co. KG · Bachmühle 2 · D-74673 Mulfingen · Phone +49 (0) 7938 81-0 · info1@de.ebmpapst.com · www.ebmpapst.com

EC centrifugal fan - RadiCal

backward-curved, single-intake

Curves: Air performance 50 Hz

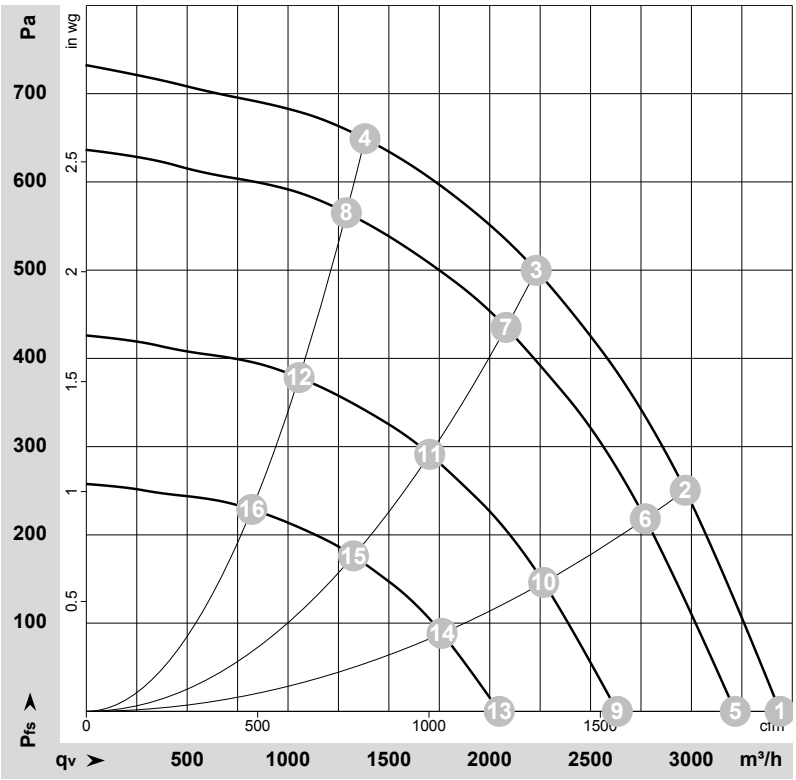

ρ = 1.15 kg/m³ ± 2 %

Measurement: LU-180958-1
Date: 2016-07-26
Nozzle: 31000-2-4013

Air performance measured according to ISO 5801 installation category A. For detailed information on the measurement setup, contact ebm-papst. Intake sound level: Sound power level according to ISO 13347 / sound pressure level measured at 1 m distance from fan axis. The values given are valid under the specified measuring conditions and may vary due to conditions of installation. For deviations from the standard configuration, the parameters have to be checked on the installed unit.

Measured values

	U	f	n	P_{ed}	I	q_V	p_{fs}	q_V	p_{fs}
	V	Hz	min^{-1}	W	A	m³/h	Pa	cfm	in. wg
1	230	50	2360	372	1.63	3440	0	2025	0.00
2	230	50	2360	476	2.08	2970	250	1750	1.00
3	230	50	2360	500	2.30	2230	500	1315	2.01
4	230	50	2360	481	2.10	1380	650	815	2.61
5	230	50	2200	304	1.33	3220	0	1895	0.00
6	230	50	2200	386	1.69	2770	220	1630	0.88
7	230	50	2200	427	1.87	2080	435	1225	1.75
8	230	50	2200	390	1.71	1290	565	760	2.27
9	230	50	1800	167	0.73	2635	0	1550	0.00
10	230	50	1800	212	0.93	2265	147	1335	0.59
11	230	50	1800	234	1.02	1705	291	1000	1.17
12	230	50	1800	214	0.94	1055	378	620	1.52
13	230	50	1400	78	0.34	2050	0	1205	0.00
14	230	50	1400	100	0.44	1765	89	1040	0.36
15	230	50	1400	110	0.48	1325	176	780	0.71
16	230	50	1400	101	0.44	820	229	485	0.92

U = Voltage · f = Frequency · n = Speed (rpm) · P_{ed} = Power consumption · I = Current draw · q_V = Air flow · p_{fs} = Pressure increase

ebm-papst Mulfingen GmbH & Co. KGaA & Co. KG · Bachmühle 2 · D-74673 Mulfingen · Phone +49 (0) 7938 81-0 · info1@de.ebmpapst.com · www.ebmpapst.com