R3G355-AY43-21

EC centrifugal fan - RadiPac

backward curved, single inlet

ebm-papst Mulfingen GmbH & Co. KG
Bachmühle 2 · D-74673 Mulfingen
Phone +49 7938 81-0
Fax +49 7938 81-110
info1@de.ebmpapst.com
www.ebmpapst.com

Nominal data

Type	**R3G355-AY43-21**
Motor	**M3G112-GA**

Phase		1~
Nominal voltage	VAC	230
Nominal voltage range	VAC	200 .. 277
Frequency	Hz	50/60
Type of data definition		ml
Speed (rpm)	min^{-1}	2450
Power input	W	1400
Current draw	A	6.0
Min. ambient temperature	°C	-25
Max. ambient temperature	°C	50

ml = Max. load · me = Max. efficiency · fa = Running at free air · cs = Customer specs · cu = Customer unit
Subject to alterations

Data in accordance with ecodesign regulation EU 327/2011 (EN 17166)

		Actual	Request 2015
01 Overall efficiency η_{es}	%	63.8	53
02 Measurement category		A	
03 Efficiency category		Static	
04 Efficiency grade N		72.8	62
05 Variable speed drive		Yes	

09 Power input P_{ed}	kW	1.4
09 Air flow q_v	m³/h	3755
09 Pressure increase p_{fs}	Pa	794
10 Speed (rpm) n	min^{-1}	2380
11 Specific ratio*		1.01

Data definition with optimum efficiency.
The ErP data is determined using a motor-impeller combination in a standardised measurement configuration.

* Specific ratio = 1 + p_{fs} / 100 000 Pa

LU-131069

EC centrifugal fan - RadiPac

backward curved, single inlet

Technical features

Mass	14 kg
Size	355 mm
Motor size	112
Surface of rotor	Coated in black
Material of electronics housing	Die-cast aluminium
Material of impeller	Aluminium sheet
Number of blades	7
Direction of rotation	Clockwise, seen on rotor
Type of protection	IP54
Insulation class	"B"
Humidity (F) / environmental protection class (H)	H1
Max. permissible ambient motor temp. (transp./ storage)	+80 °C
Min. permissible ambient motor temp. (transp./storage)	-40 °C
Mounting position	Shaft horizontal or rotor on bottom; rotor on top on request
Condensation drainage holes	Rotor-side
Operation mode	S1
Motor bearing	Ball bearing
Technical features	- Output 10 VDC, max. 10 mA - Output 20 VDC, max. 50 mA - Output for slave 0-10 V - Tach output - Input for sensor 0-10 V or 4-20 mA - External 24 V input (programming) - External release input - Alarm relay - Integrated PID controller - Output limit - Motor current limit - PFC, active - RS485 MODBUS RTU - Soft start - Control input 0-10 VDC / PWM - Control interface with SELV potential safely disconnected from the mains - Over-temperature protected electronics / motor - Line undervoltage / phase failure detection
EMC interference immunity	Acc. to EN 61000-6-2 (industrial environment)
EMC harmonics	Acc. to EN 61000-3-2/3
EMC interference emission	Acc. to EN 61000-6-4 (industrial environment)
Touch current acc. IEC 60990 (measuring network Fig. 4, TN system)	<= 3.5 mA
Electrical connection	Terminal box
Motor protection	Thermal overload protector (TOP) wired internally
Cable exit	Variable
Protection class	I (if protective earth is connected by customer)
Product conforming to standard	EN 61800-5-1; CE

Approval	EAC; UL 1004-7 + 60730-1

EC centrifugal fan - RadiPac

backward curved, single inlet

Product drawing

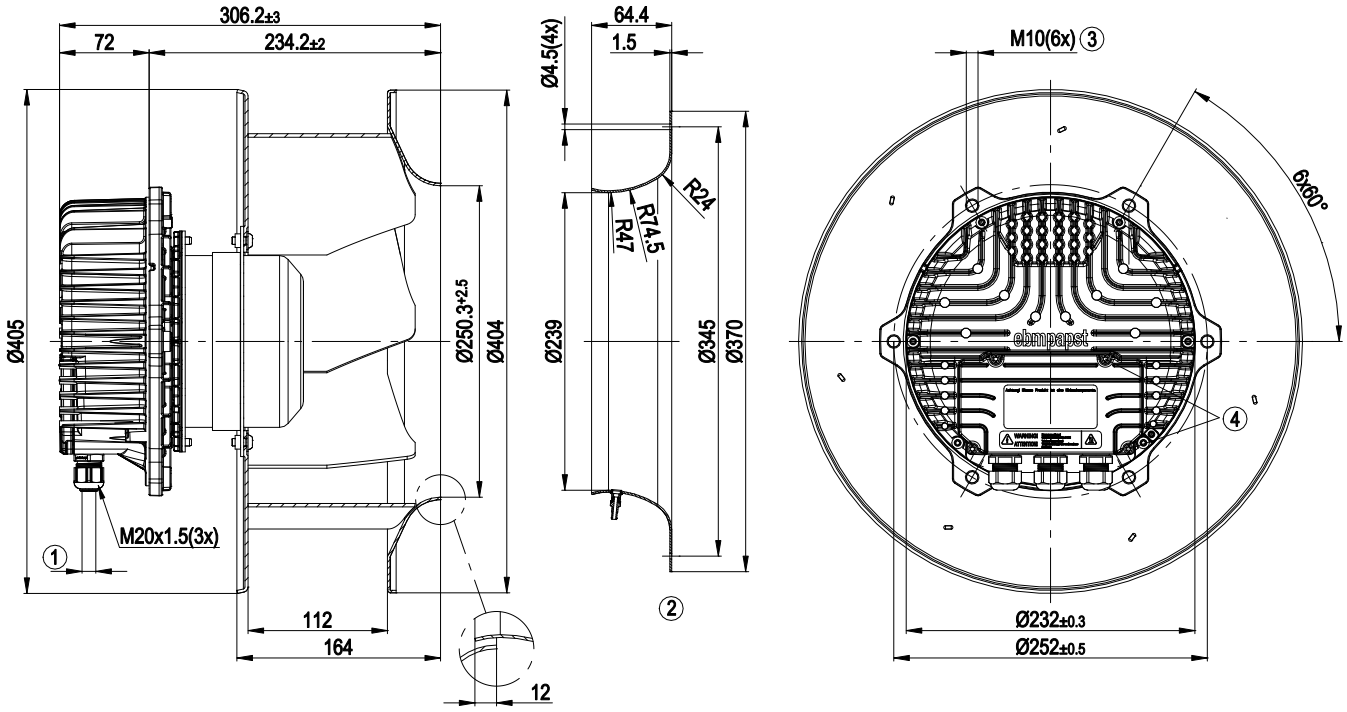

1	Cable diameter: min. 4 mm, max. 10 mm; tightening torque: 4±0.6 Nm
2	Accessory part: inlet nozzle 35675-2-4013 with a pressure tap not included in the standard scope of delivery; other inlet nozzles on request
3	Depth of screw 12 - 16 mm
4	Tightening torque 3.5±0.5 Nm

Connection screen

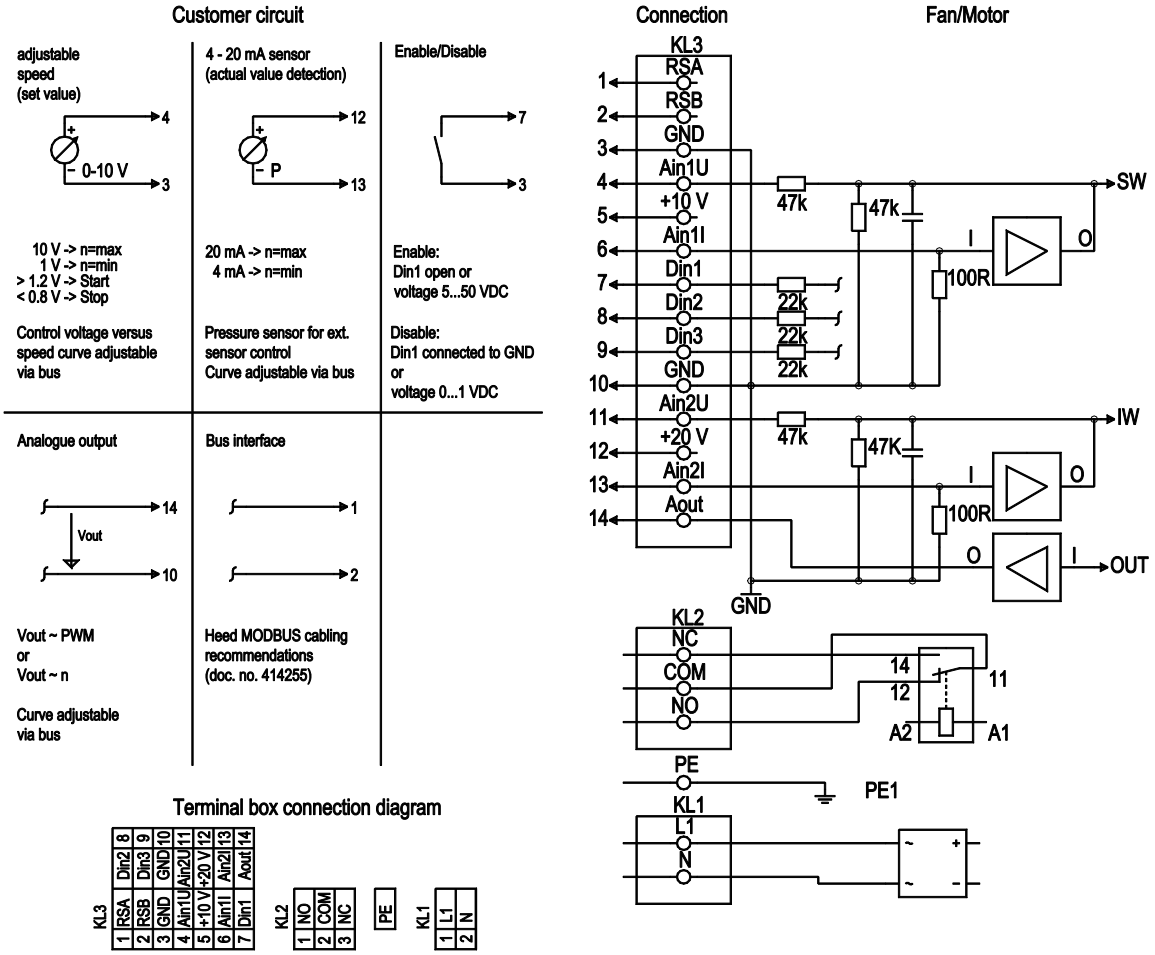

Terminal box connection diagram

No.	Conn.	Designation	Function / assignment
KL1	1, 2	L1/N	Mains connection, power supply; see technical data for nominal voltage range
PE	PE	PE	Earth connection, PE connection
KL2	1	NO	Status relay, floating status contact, make for failure
KL2	2	COM	Status relay, floating status contact, changeover contact, common connection, contact rating, max. 250 VAC/2 A (AC1)/min. 10 mA
KL2	3	NC	Status relay, floating status contact, break for failure
KL3	1	RSA	Bus connection RS-485, RSA, MODBUS RTU; SELV
KL3	2	RSB	Bus connection RS-485, RSB, MODBUS RTU; SELV
KL3	3	GND	Signal ground for control interface, SELV
KL3	4	Ain1 U	Analogue input 1, set value: 0-10 V, Ri = 100 kΩ, parametrisable curve, only for use as alternative to input Ain1; SELV
KL3	5	+10 V	Fixed voltage output 10 VDC, +10 V +/-3 %, max. 10 mA, short-circuit-proof, power supply for ext. devices (e.g. potentiometer); SELV
KL3	6	Ain1 I	Analogue input 1, set value: 4-20 mA; Ri = 100 Ω, parametrisable curve, only for use as alternative to input Ain1 U; SELV
KL3	7	Din1	Digital input 1: Enabling of electronics, Enabling: Pin open or applied voltage 5-50 VDC Disabling: Bridge to GND or applied voltage <1 VDC Reset function: Triggers software reset after a level change to <1 VDC; SELV

No.	Conn.	Designation	Function / assignment
KL3	8	Din2	Digital input 2: Parameter set 1/2 switching, depending on EEPROM setting, the valid/used parameter set can be selected via the bus or via the digital input DIN2. Parameter set 1: Pin open or applied voltage 5-50 VDC Parameter set 2: bridge to GND or applied voltage <1 VDC; SELV
KL3	9	Din3	Digital input 3: Controller function of integrated controller, depending on EEPROM setting, the controller function of the integrated controller can be selected via the bus or the digital input Din 3 normal: pin open or applied voltage 5-50 VDC inverse: bridge to GND or applied voltage <1 VDC; SELV
KL3	10	GND	Signal ground for control interface, SELV
KL3	11	Ain2 U	Analogue input 2, actual value: 0-10 V, Ri = 100 kΩ, parametrisable curve, only usable as alternative to input Ain2; SELV
KL3	12	+20 V	Fixed voltage output 20 VDC, +20 V +25/-10%, max. 50 mA, short-circuit-proof, power supply for ext. devices (e.g. sensors); SELV Alternatively: +24 VDC input for parametrisation without mains power
KL3	13	Ain2 I	Analogue input 2, actual value: 4-20 mA, Ri = 100 Ω, parametrisable curve, only for use as alternative to input Ain2 U; SELV
KL3	14	Aout	Analogue output 0-10 VDC, max. 5 mA, output of the current motor level control coefficient / motor speed parametrisable curve; SELV

EC centrifugal fan - RadiPac

backward curved, single inlet

Charts: Air flow 50 Hz

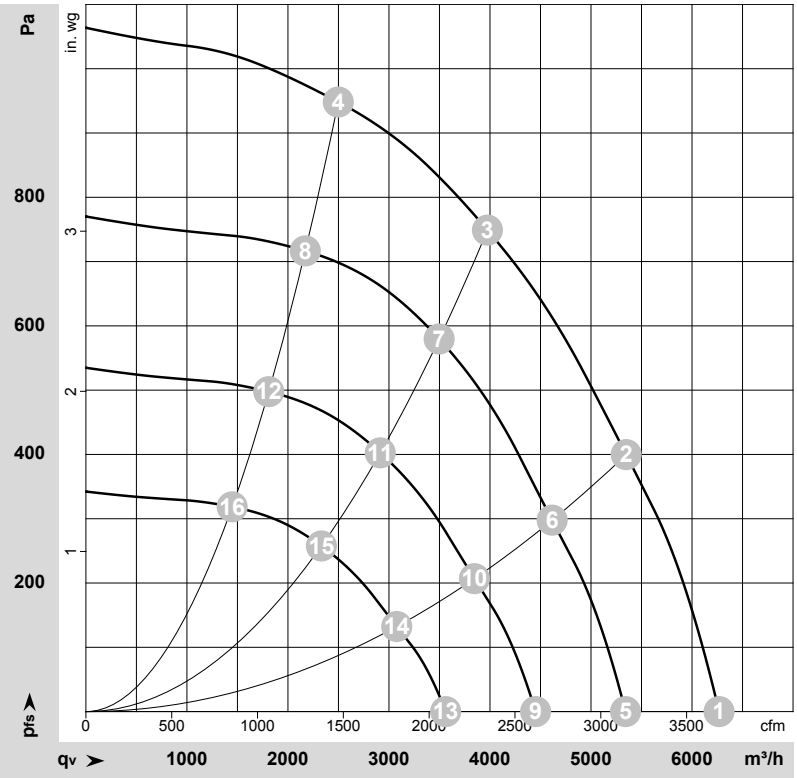

ρ = 1.15 kg/m³ ± 2 %

Measurement: LU-131069-1

Air performance measured as per ISO 5801 Installation category A. For detailed information on the measuring set-up, please contact ebm-papst. Suction-side noise levels: LwA measured as per ISO 13347 / LpA measured with 1m distance to fan axis. The values given are valid under the measuring conditions mentioned above and may vary according to the actual installation situation. With any deviation from the standard set-up, the specific values have to be checked and reviewed with the unit installed.

Measured values

	Conn.	U	f	n	P_{ed}	I	LpA_{in}	LwA_{in}	LwA_{out}	q_V	p_{fs}	q_V	p_{fs}
		V	Hz	min^{-1}	W	A	dB(A)	dB(A)	dB(A)	m^3/h	Pa	cfm	in. wg
1	1~	230	50	2450	998	4.33	79	86	93	6270	0	3690	0.00
2	1~	230	50	2450	1249	5.43	74	82	89	5350	400	3150	1.61
3	1~	230	50	2450	1400	6.00	72	79	86	3975	750	2340	3.01
4	1~	230	50	2450	1327	5.77	75	82	89	2500	950	1470	3.81
5	1~	230	50	2100	618	2.68	75	82	89	5340	0	3145	0.00
6	1~	230	50	2100	801	3.48	70	78	85	4615	297	2715	1.19
7	1~	230	50	2100	950	4.13	69	76	83	3495	581	2060	2.33
8	1~	230	50	2100	873	3.79	71	79	86	2170	717	1280	2.88
9	1~	230	50	1750	357	1.55	70	78	84	4450	0	2620	0.00
10	1~	230	50	1750	463	2.01	66	73	80	3845	206	2265	0.83
11	1~	230	50	1750	550	2.39	64	71	79	2915	403	1715	1.62
12	1~	230	50	1750	505	2.20	67	74	81	1810	498	1065	2.00
13	1~	230	50	1400	183	0.79	65	72	79	3560	0	2095	0.00
14	1~	230	50	1400	237	1.03	60	68	75	3075	132	1810	0.53
15	1~	230	50	1400	281	1.22	58	66	73	2330	258	1370	1.04
16	1~	230	50	1400	259	1.12	61	69	76	1450	318	850	1.28

Conn. = Connection · U = Supply voltage · f = Frequency · n = Speed (rpm) · P_{ed} = Power input · I = Current draw · LpA_{in} = Sound pressure level inlet side · LwA_{in} = Sound power level inlet side
LwA_{out} = Sound power level outlet side · q_V = Air flow · p_{fs} = Pressure increase

ebmpapst