R3G400-AQ23-68

EC centrifugal fan - RadiPac

backward-curved, single-intake

Nominal data

Type	**R3G400-AQ23-68**
Motor	**M3G150-FF**

Phase		3~
Nominal voltage	VAC	400
Nominal voltage range	VAC	380 .. 480
Frequency	Hz	50/60
Method of obtaining data		ml
Speed	min^{-1}	2680
Power consumption	W	3450
Current draw	A	5.3
Min. ambient temperature	°C	-25
Max. ambient temperature	°C	50

ml = Max. load · me = Max. efficiency · fa = Free air · cs = Customer specification · ce = Customer equipment
Subject to change

Data according to ErP Directive

		Actual	Req. 2015
01 Overall efficiency η_{es}	%	67.6	57
02 Measurement category		A	
03 Efficiency category		Static	
04 Efficiency grade N		72.6	62
05 Variable speed drive		Yes	

09 Power consumption P_{ed}	kW	3.37
09 Air flow q_v	m³/h	6690
09 Pressure increase p_{fs}	Pa	1161
10 Speed n	min^{-1}	2700
11 Specific ratio*		1.01

Data obtained at optimum efficiency level.
The ErP data is determined using a motor-impeller combination in a standardized measurement setup.

* Specific ratio = 1 + p_{fs} / 100 000 Pa

LU-162947

Technical description

Weight	21.5 kg
Fan size	400 mm
Rotor surface	Painted black
Electronics housing material	Die-cast aluminum
Impeller material	Sheet aluminum
Number of blades	7
Direction of rotation	Clockwise, viewed toward rotor
Degree of protection	IP55
Insulation class	"F"
Moisture (F) / Environmental (H) protection class	F4-1
Max. permitted ambient temp. for motor (transport/storage)	+80 °C
Min. permitted ambient temp. for motor (transport/storage)	-40 °C
Installation position	Shaft horizontal or rotor on bottom; rotor on top on request
Condensation drainage holes	On rotor side
Mode	S1
Motor bearing	Ball bearing
Technical features	- Output 10 VDC, max. 10 mA - Output 20 VDC, max. 50 mA - Output for slave 0-10 V - Operation and alarm display - Input for sensor 0-10 V or 4-20 mA - External 24 V input (parameter setting) - External release input - Alarm relay - Integrated PID controller - Power limiter - Motor current limitation - RS-485 MODBUS-RTU - Soft start - Control input 0-10 VDC / PWM - Control interface with SELV potential safely disconnected from supply - Thermal overload protection for electronics/motor - Line undervoltage / phase failure detection
EMC immunity to interference	According to EN 61000-6-2 (industrial environment)
EMC interference emission	According to EN 61000-6-3 (household environment), except EN 61000-3-2 for professionally used equipment with a total rated power greater than 1 kW
Touch current according to IEC 60990 (measuring circuit Fig. 4, TN system)	<= 3.5 mA
Electrical hookup	Via terminal box
Motor protection	Reverse polarity and locked-rotor protection
Protection class	I (with customer connection of protective earth)
Conformity with standards	EN 61800-5-1; CE
Approval	EAC; C22.2 No.77 + CAN/CSA-E60730-1; UL 1004-7 + 60730

EC centrifugal fan - RadiPac

backward-curved, single-intake

Product drawing

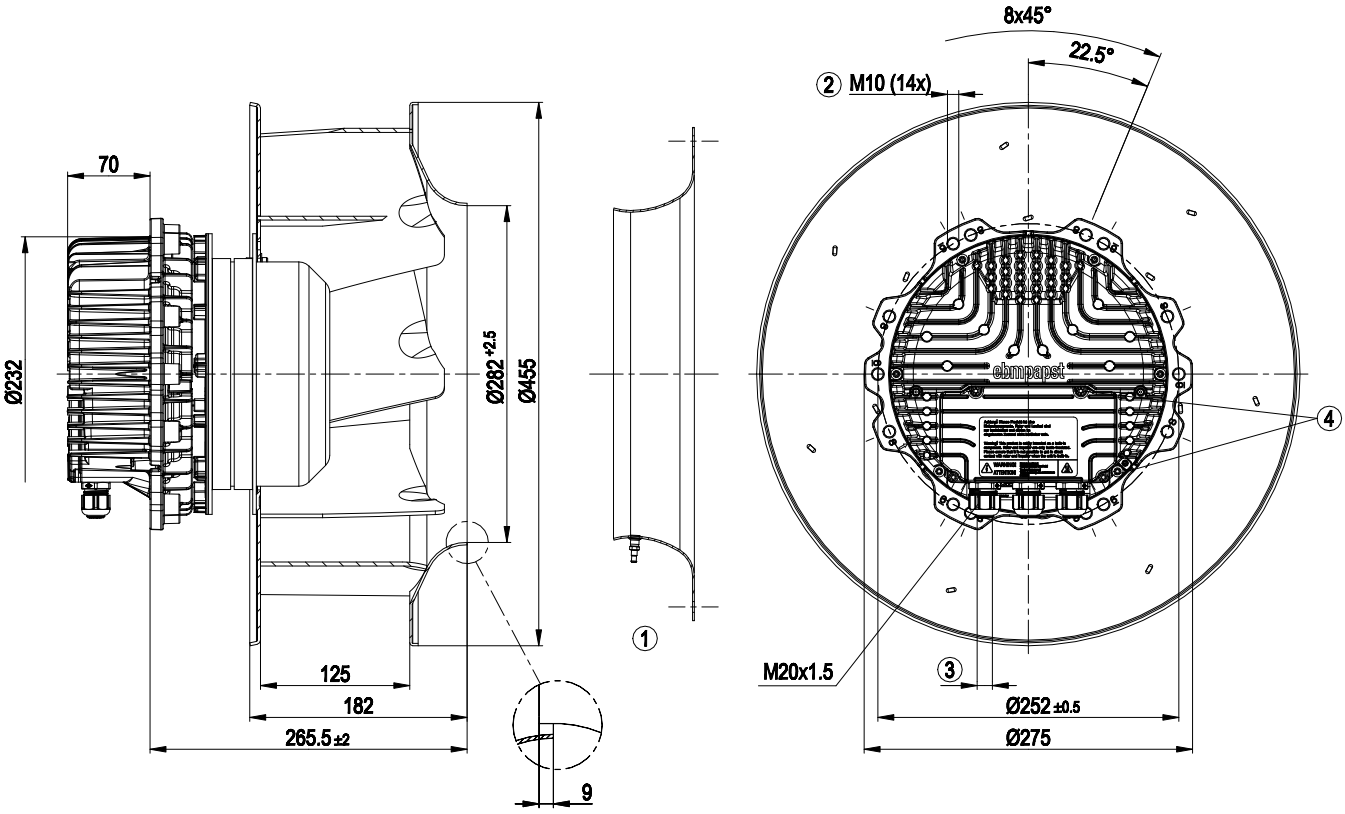

1	Accessory part: Inlet ring 40075-2-4013 with pressure tap not included in scope of delivery
2	Max. clearance for screw 25 mm
3	Cable diameter min. 4 mm, max. 10 mm; tightening torque 4 ± 0.6 Nm
4	Tightening torque 3.5 ± 0.5 Nm

Accessory part

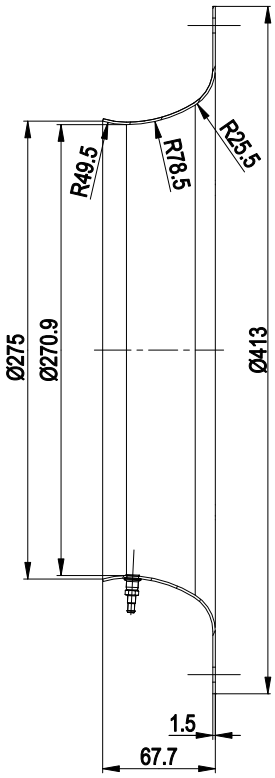

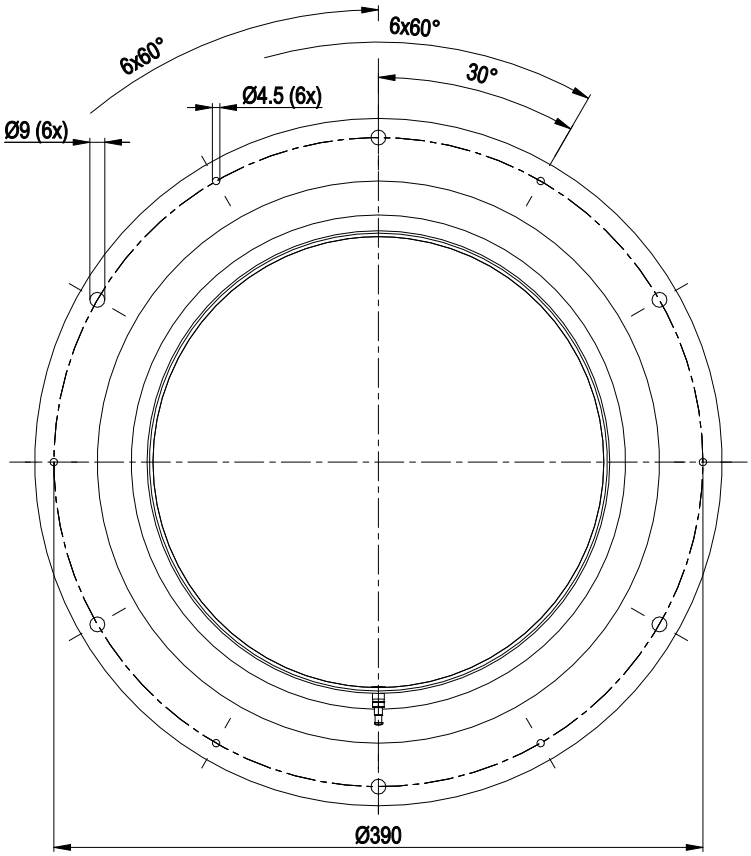

1	Inlet ring with pressure tap 40075-2-4013 (k-factor: 188) not included in scope of delivery

Connection diagram

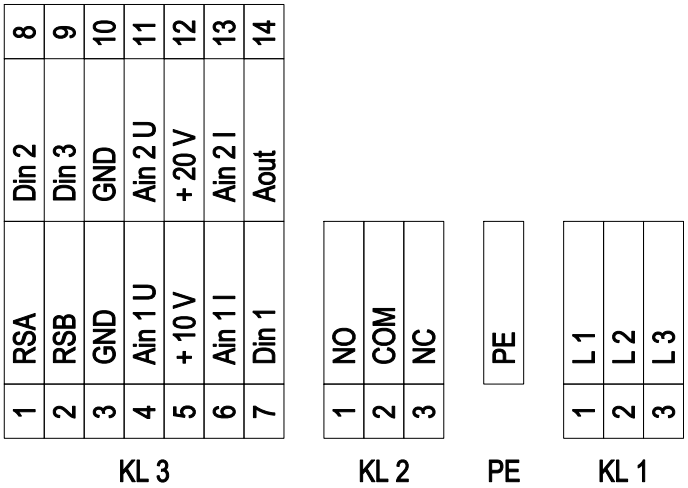

No.	Conn.	Designation	Function/assignment
KL 1	1	L1	Supply connection, power supply 3-phase 380-480 VAC, 50/60 Hz
KL 1	2	L2	Supply connection, power supply 3-phase 380-480 VAC, 50/60 Hz
KL 1	3	L3	Supply connection, power supply 3-phase 380-480 VAC, 50/60 Hz
PE		PE	Ground connection, PE connection
KL 2	1	NO	Status relay, floating status contact; make for failure
KL2	2	COM	Status relay, floating status contact; changeover contact; common connection; contact rating 250 VAC / max. 2 A (AC1) / min. 10 mA
KL2	3	NC	Status relay, floating status contact; break for failure
KL 3	1	RSA	Bus connection RS485, RSA, MODBUS-RTU; SELV
KL 3	2	RSB	Bus connection RS485, RSB, MODBUS-RTU; SELV
KL 3	3 / 10	GND	Reference ground for control interface; SELV
KL 3	4	Ain1 U	Analog input 1, set value: 0-10 V, Ri = 100 kΩ, adjustable curve, only usable as alternative to input Ain1 I; SELV
KL 3	5	+ 10 V	Fixed voltage output 10 VDC, +10 V ±3%, max. 10 mA, short-circuit-proof power supply for external devices (e.g. pot); SELV
KL 3	6	Ain1 I	Analog input 1, set value: 4-20 mA, Ri = 100 Ω, adjustable curve, only usable as alternative to input Ain1U; SELV
KL 3	7	Din1	Digital input 1: enable electronics, enable: pin open or applied voltage 5-50 VDC disable: bridge to GND or applied voltage < 1 VDC reset function: triggers software reset after a level change to < 1 VDC; SELV
KL 3	8	Din2	Digital input 2: Switching parameter sets 1/2, according to EEPROM setting, the valid or used parameter set can be selected via bus or via digital input DIN2. Parameter set 1: pin open or applied voltage 5-50 VDC Parameter set 2: bridge to GND or applied voltage < 1 VDC; SELV
KL 3	9	Din3	Digital input 3: according to EEPROM setting, the integrated controller's direction of action can be selected as normal/inverse via bus or digital input normal: pin open or applied voltage 5-50 VDC inverse: bridge to GND or applied voltage < 1 VDC; SELV
KL 3	11	Ain2 U	Analog input 2, measured value: 0-10 V, Ri = 100 kΩ, adjustable curve, only usable as alternative to input Ain2I; SELV
KL 3	12	+ 20 V	Fixed voltage output 20 VDC, +20 V +25/-10%, max. 50 mA, short-circuit-proof power supply for external devices (e.g. sensors); SELV

No.	Conn.	Designation	Function/assignment
KL 3	13	Ain2 I	Analog input 2, measured value: 4-20 mA, Ri = 100 Ω, adjustable curve, only usable as alternative to input Ain2U; SELV
KL 3	14	Aout	Analog output 0-10 VDC, max. 5 mA, output of current motor modulation level / motor speed adjustable curve; SELV

EC centrifugal fan - RadiPac

backward-curved, single-intake

Curves: Air performance 50 Hz

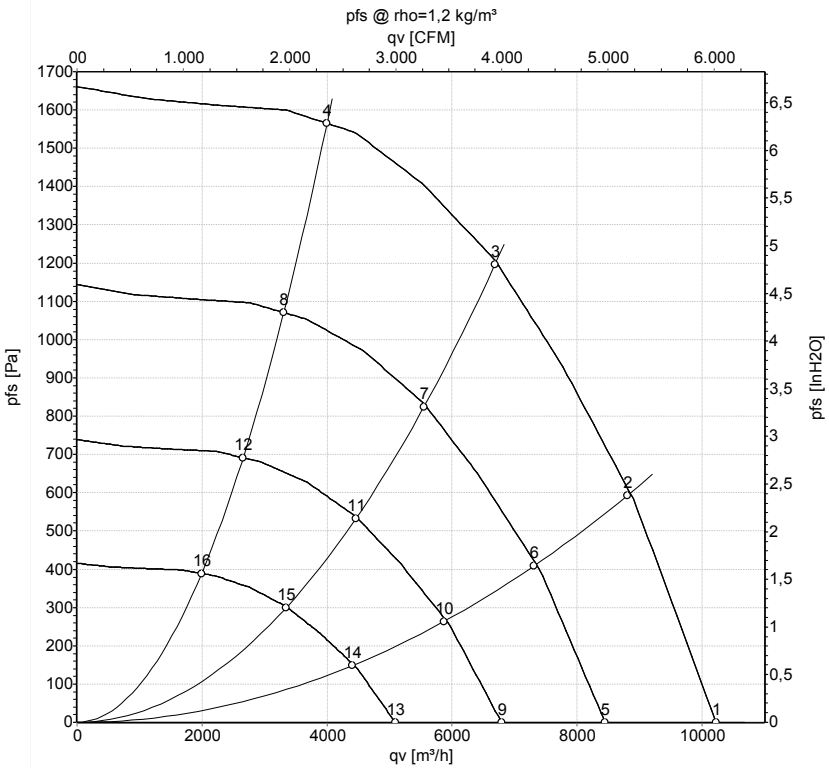

Measurement: LU-162947-1

Air performance measured according to ISO 5801 installation category A. For detailed information on the measurement setup, contact ebm-papst. Intake sound level: Sound power level according to ISO 13347 / sound pressure level measured at 1 m distance from fan axis. The values given are valid under the specified measuring conditions and may vary due to conditions of installation. For deviations from the standard configuration, the parameters have to be checked on the installed unit.

Measured values

	U	f	n	P_{ed}	I	LpA_{in}	LwA_{in}	LwA_{out}	qv	p_{fs}
	V	Hz	min^{-1}	W	A	dB(A)	dB(A)	dB(A)	m^3/h	Pa
1	400	50	2680	2384	3.65	84	93	100	10220	0
2	400	50	2680	3069	4.69	81	88	96	8805	600
3	400	50	2680	3380	5.15	78	85	94	6685	1200
4	400	50	2680	3140	4.77	82	91	96	4000	1560
5	400	50	2240	1346	2.06	80	88	95	8450	0
6	400	50	2240	1758	2.69	76	84	91	7310	423
7	400	50	2240	1932	2.94	73	80	89	5550	833
8	400	50	2240	1777	2.70	78	87	91	3305	1071
9	400	50	1800	699	1.07	74	83	89	6790	0
10	400	50	1800	912	1.40	70	78	86	5875	273
11	400	50	1800	1003	1.53	68	75	83	4460	538
12	400	50	1800	922	1.40	72	81	86	2655	691
13	400	50	1350	295	0.45	67	75	82	5090	0
14	400	50	1350	385	0.59	63	71	79	4405	154
15	400	50	1350	423	0.64	61	68	76	3345	302
16	400	50	1350	389	0.59	65	74	79	1995	389

U = Power supply · f = Frequency · n = Speed · P_{ed} = Power consumption · I = Current draw · LpA_{in} = Sound pressure level intake side · LwA_{in} = Sound power level intake side
LwA_{out} = Sound power level outlet side · qv = Air flow · p_{fs} = Pressure increase

ebmpapst