R3G500-PB33-01

EC centrifugal fan - RadiPac

backward-curved, single-intake

ebm-papst Mulfingen GmbH & Co. KG
Bachmühle 2 · D-74673 Mulfingen
Phone +49 7938 81-0
Fax +49 7938 81-110
info1@de.ebmpapst.com
www.ebmpapst.com

Limited partnership · Headquarters Mulfingen
Amtsgericht (court of registration) Stuttgart · HRA 590344

General partner Elektrobau Mulfingen GmbH · Headquarters Mulfingen
Amtsgericht (court of registration) Stuttgart · HRB 590142

Nominal data

Type	**R3G500-PB33-01**
Motor	**M3G150-IF**

Phase		3~
Nominal voltage	VAC	400
Nominal voltage range	VAC	380 .. 480
Frequency	Hz	50/60
Method of obtaining data		ml
Speed (rpm)	min^{-1}	2250
Power consumption	W	5700
Current draw	A	9
Min. ambient temperature	°C	-25
Max. ambient temperature	°C	40

ml = Max. load · me = Max. efficiency · fa = Free air · cs = Customer specification · ce = Customer equipment
Subject to change

Data according to Commission Regulation (EU) 327/2011 (EN 17166)

		Actual	Req. 2015
01 Overall efficiency η_{es}	%	69.2	59.5
02 Measurement category		A	
03 Efficiency category		Static	
04 Efficiency grade N		71.7	62
05 Variable speed drive		Yes	

09 Power consumption P_{ed}	kW	5.72
09 Air flow q_v	m³/h	10945
09 Pressure increase p_{fs}	Pa	1245
10 Speed (rpm) n	min^{-1}	2265
11 Specific ratio*		1.01

Data obtained at optimum efficiency level.
The ErP data is determined using a motor-impeller combination in a standardized measurement setup.

* Specific ratio = 1 + p_{fs} / 100 000 Pa

LU-173840

EC centrifugal fan - RadiPac

backward-curved, single-intake

Technical description

Weight	32.2 kg
Size	500 mm
Motor size	150
Rotor surface	Painted black
Electronics housing material	Die-cast aluminum
Impeller material	Sheet aluminum
Number of blades	5
Direction of rotation	Clockwise, viewed toward rotor
Degree of protection	IP55
Insulation class	"F"
Moisture (F) / Environmental (H) protection class	H1
Max. permitted ambient temp. for motor (transport/storage)	+80 °C
Min. permitted ambient temp. for motor (transport/storage)	-40 °C
Installation position	Shaft horizontal or rotor on bottom; rotor on top on request
Condensation drainage holes	On rotor side
Mode	S1
Motor bearing	Ball bearing
Technical features	- Output 10 VDC, max. 10 mA - Output 20 VDC, max. 50 mA - Output for slave 0-10 V - Operation and alarm display - Input for sensor 0-10 V or 4-20 mA - External 24 V input (parameter setting) - External release input - Alarm relay - Integrated PID controller - Power limiter - Motor current limitation - PFC, passive - RS-485 MODBUS-RTU - Soft start - Control input 0-10 VDC / PWM - Control interface with SELV potential safely disconnected from the mains - Thermal overload protection for electronics/motor - Line undervoltage / phase failure detection
EMC immunity to interference	According to EN 61000-6-2 (industrial environment)
EMC interference emission	According to EN 61000-6-3 (household environment), except EN 61000-3-2 for professionally used equipment with a total rated power greater than 1 kW
Touch current according to IEC 60990 (measuring circuit Fig. 4, TN system)	<= 3.5 mA
Electrical hookup	Terminal box
Motor protection	Reverse polarity and locked-rotor protection
Protection class	I (with customer connection of protective earth)
Conformity with standards	EN 61800-5-1; CE
Approval	CSA C22.2 No. 77 + CAN/CSA-E60730-1; EAC; UL 1004-7 + 60730-1

ebm-papst Mulfingen GmbH & Co. KG · Bachmühle 2 · D-74673 Mulfingen · Phone +49 (0) 7938 81-0 · Fax +49 (0) 7938 81-110 · info1@de.ebmpapst.com · www.ebmpapst.com

EC centrifugal fan - RadiPac

backward-curved, single-intake

Product drawing

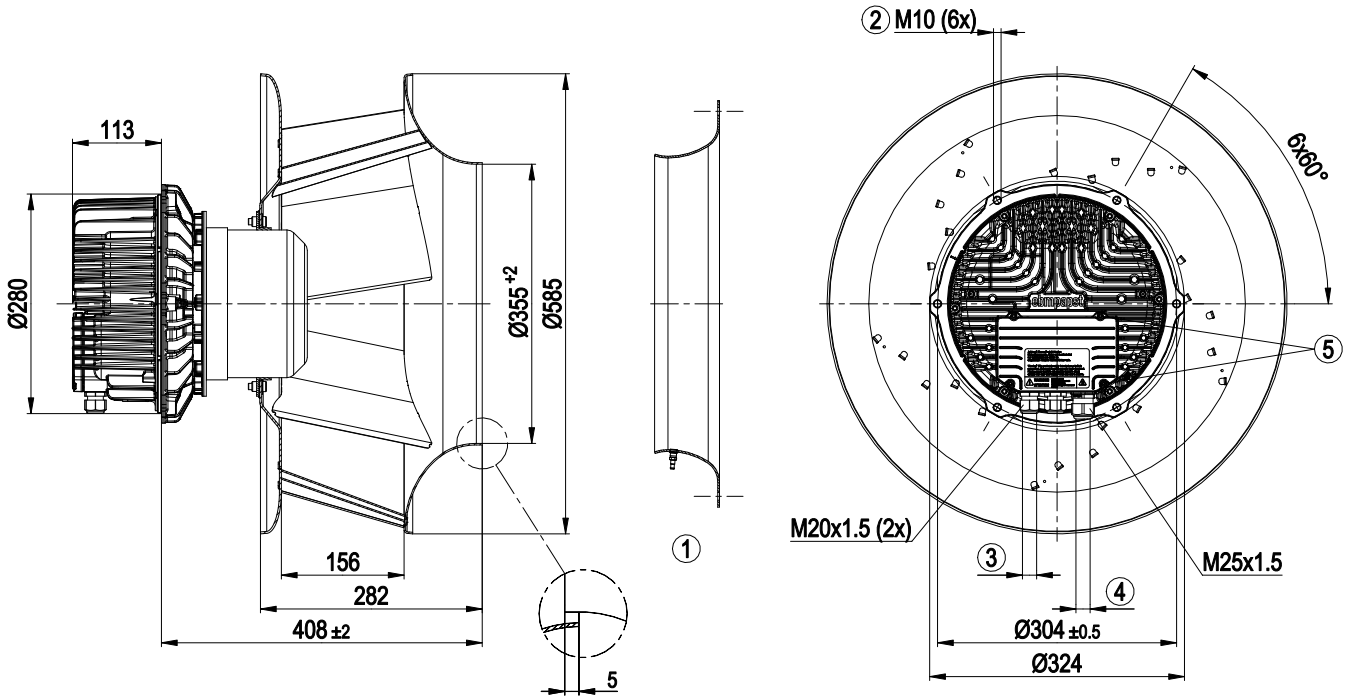

1	Accessory part: Inlet ring 64025-2-4013 with pressure tap (k-factor: 281) not included in scope of delivery
2	Max. clearance for screw 20 mm
3	Cable diameter min. 4 mm, max. 10 mm, tightening torque 4 ± 0.6 Nm
4	Cable diameter min. 9 mm, max. 16 mm, tightening torque 6 ± 0.9 Nm
5	Tightening torque 3.5 ± 0.5 Nm

ebm-papst Mulfingen GmbH & Co. KG · Bachmühle 2 · D-74673 Mulfingen · Phone +49 (0) 7938 81-0 · Fax +49 (0) 7938 81-110 · info1@de.ebmpapst.com · www.ebmpapst.com

Accessory part

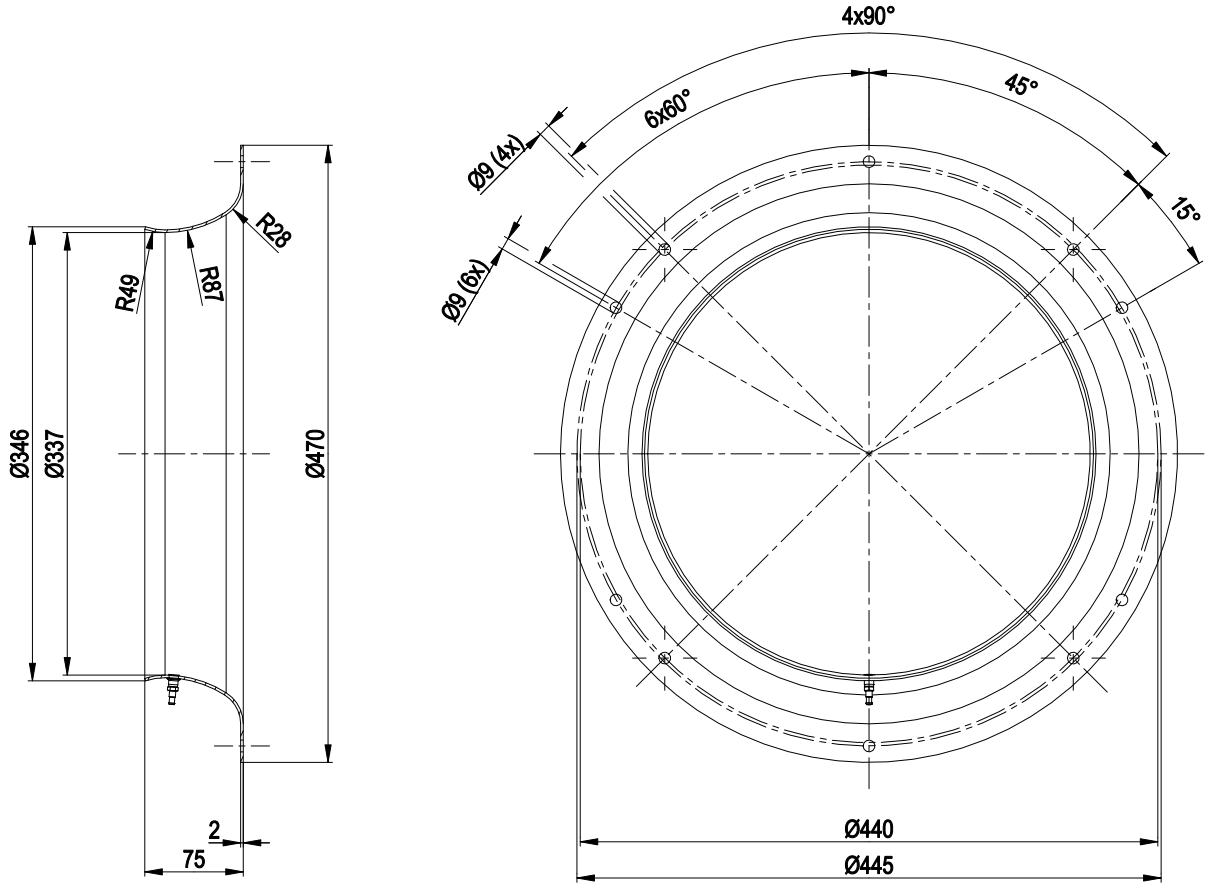

Inlet ring 64025-2-4013 with pressure tap not included in scope of delivery

ebm-papst Mulfingen GmbH & Co. KG · Bachmühle 2 · D-74673 Mulfingen · Phone +49 (0) 7938 81-0 · Fax +49 (0) 7938 81-110 · info1@de.ebmpapst.com · www.ebmpapst.com

Connection diagram

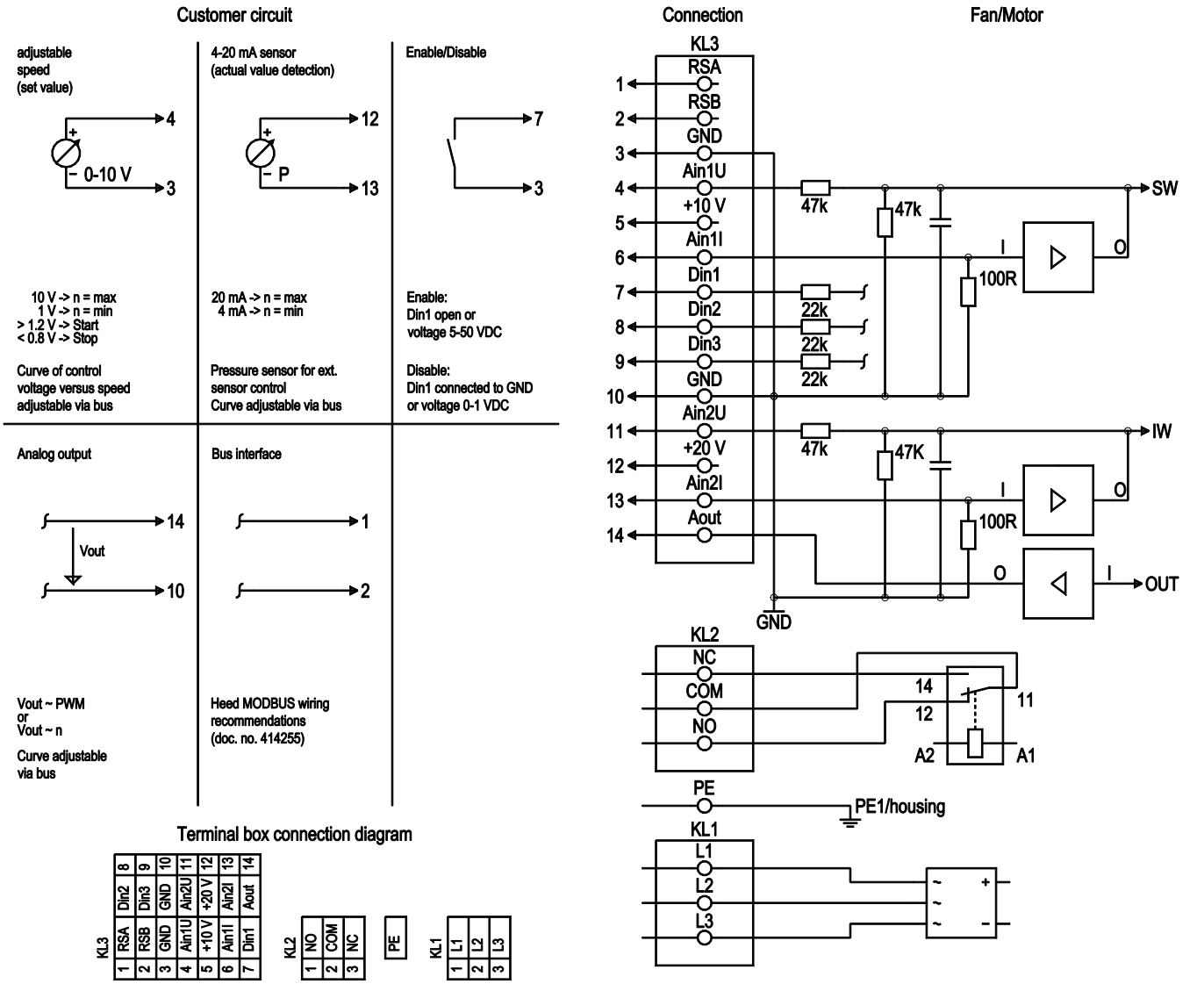

Terminal box connection diagram

No.	Conn.	Designation	Function/assignment
KL 1	1	L1	Supply connection, power supply, phase, see nameplate for voltage range
KL 1	2	L2	Supply connection, power supply, phase, see nameplate for voltage range
KL 1	3	L3	Supply connection, power supply, phase, see nameplate for voltage range
PE		PE	Ground connection, PE connection
KL 2	1	NO	Status relay, floating status contact, make for failure
KL 2	2	COM	Status relay, floating status contact, changeover contact, common connection, contact rating, max. 250 VAC/2 A (AC1)/min. 10 mA
KL 2	3	NC	Status relay, floating status contact, break for failure
KL 3	1	RSA	Bus connection RS485, RSA, MODBUS RTU; SELV
KL 3	2	RSB	Bus connection RS485, RSB, MODBUS RTU; SELV
KL 3	3 / 10	GND	Reference ground for control interface, SELV
KL 3	4	Ain1 U	Analog input 1, set value: 0-10 V, Ri = 100 kΩ, adjustable curve, only usable as alternative to input Ain1 I; SELV

ebm-papst Mulfingen GmbH & Co. KG · Bachmühle 2 · D-74673 Mulfingen · Phone +49 (0) 7938 81-0 · Fax +49 (0) 7938 81-110 · info1@de.ebmpapst.com · www.ebmpapst.com

No.	Conn.	Designation	Function/assignment
KL 3	5	+ 10 V	Fixed voltage output 10 VDC, +10 V ± 3%, max. 10 mA, short-circuit-proof, power supply for external devices (e.g. pot); SELV
KL 3	6	Ain1 I	Analog input 1, set value: 4-20 mA, Ri = 100 Ω, adjustable curve, only usable as alternative to input Ain1 U; SELV
KL 3	7	Din1	Digital input 1: enable electronics, enable: pin open or applied voltage 5-50 VDC disable: bridge to GND or applied voltage < 1 VDC reset function: triggers software reset after a level change to < 1 VDC; SELV
KL 3	8	Din2	Digital input 2: Switching parameter sets 1/2, according to EEPROM setting, the valid or used parameter set can be selected via bus or via digital input DIN2. Parameter set 1: pin open or applied voltage 5-50 VDC Parameter set 2: bridge to GND or applied voltage < 1 VDC; SELV
KL 3	9	Din3	Digital input 3: Direction of action of integrated controller, according to EEPROM setting, the direction of action of the integrated controller can be selected as normal/inverse via bus or digital input Normal: Pin open or applied voltage 5-50 VDC Inverse: Bridge to GND or applied voltage < 1 VDC; SELV
KL 3	11	Ain2 U	Analog input 2, measured value: 0-10 V, Ri = 100 kΩ, adjustable curve, only usable as alternative to input Ain2 I; SELV
KL 3	12	+ 20 V	Fixed voltage output 20 VDC, +20 V +25/-10%, max. 50 mA, short-circuit-proof, power supply for external devices (e.g. sensors); SELV Alternatively: +24 VDC input for parameterization without line voltage
KL 3	13	Ain2 I	Analog input 2, measured value: 4-20 mA, Ri = 100 Ω, adjustable curve, only usable as alternative to input Ain2 U; SELV
KL 3	14	Aout	Analog output 0-10 V, max. 5 mA, output of current motor modulation level; adjustable curve; SELV

ebm-papst Mulfingen GmbH & Co. KG · Bachmühle 2 · D-74673 Mulfingen · Phone +49 (0) 7938 81-0 · Fax +49 (0) 7938 81-110 · info1@de.ebmpapst.com · www.ebmpapst.com

EC centrifugal fan - RadiPac

backward-curved, single-intake

Curves: Air performance 50 Hz

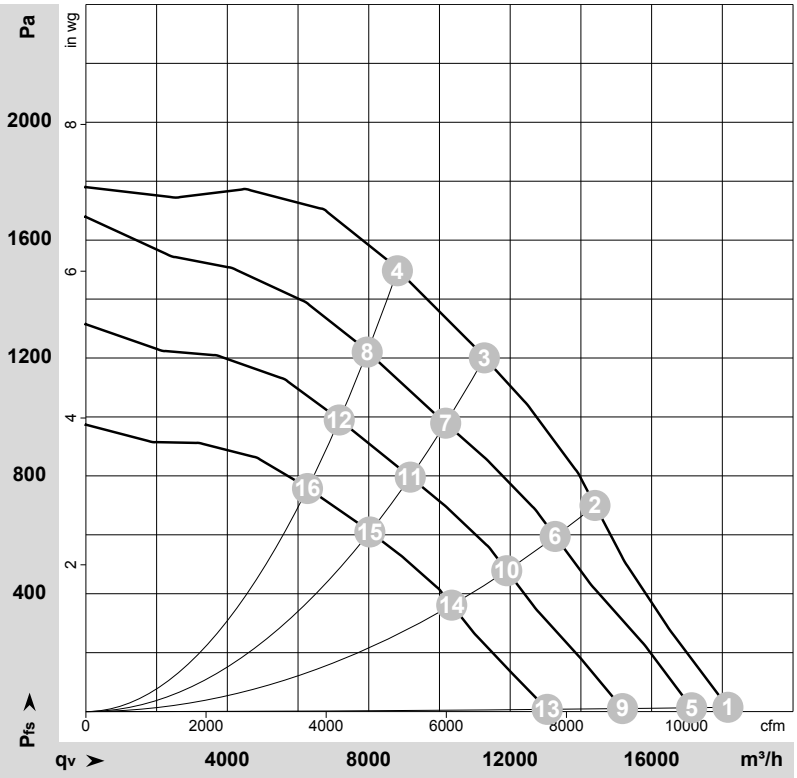

ρ = 1.15 kg/m³ ± 2 %

Measurement: LU-173840-1

Air performance measured according to ISO 5801 installation category A. For detailed information on the measurement setup, contact ebm-papst. Intake sound level: Sound power level according to ISO 13347 / sound pressure level measured at 1 m distance from fan axis. The values given are valid under the specified measuring conditions and may vary due to conditions of installation. For deviations from the standard configuration, the parameters have to be checked on the installed unit.

Measured values

	U	f	n	P_{ed}	I	LpA_{in}	LwA_{in}	LwA_{out}	q_V	p_{fs}	q_V	p_{fs}
	V	Hz	min^{-1}	W	A	dB(A)	dB(A)	dB(A)	m^3/h	Pa	cfm	in. wg
1	400	50	2250	3240	5.05	98	105	104	18160	0	10690	0.00
2	400	50	2250	4860	7.47	88	95	97	14400	700	8475	2.81
3	400	50	2250	5700	9.00	81	88	94	11270	1200	6635	4.82
4	400	50	2250	5700	8.74	80	87	94	8810	1500	5185	6.02
5	400	50	2150	2734	4.30	97	103	103	17130	0	10080	0.00
6	400	50	2090	3820	5.91	87	94	96	13270	595	7810	2.39
7	400	50	2045	4188	6.46	79	86	92	10175	979	5990	3.93
8	400	50	2050	4178	6.44	78	84	91	7955	1223	4685	4.91
9	400	50	1910	1954	3.18	93	101	101	15180	0	8935	0.00
10	400	50	1875	2762	4.34	84	92	94	11905	479	7005	1.92
11	400	50	1845	3059	4.78	77	84	91	9175	796	5400	3.20
12	400	50	1845	3052	4.77	75	82	90	7165	991	4220	3.98
13	400	50	1650	1305	2.29	92	98	99	13050	0	7680	0.00
14	400	50	1630	1837	3.02	81	88	91	10345	362	6090	1.45
15	400	50	1615	2063	3.33	73	80	88	8030	610	4725	2.45
16	400	50	1615	2061	3.33	72	79	87	6265	759	3690	3.05

U = Voltage · f = Frequency · n = Speed (rpm) · P_{ed} = Power consumption · I = Current draw · LpA_{in} = Sound pressure level intake side · LwA_{in} = Sound power level intake side
LwA_{out} = Sound power level outlet side · q_V = Air flow · p_{fs} = Pressure increase

ebm-papst Mulfingen GmbH & Co. KG · Bachmühle 2 · D-74673 Mulfingen · Phone +49 (0) 7938 81-0 · Fax +49 (0) 7938 81-110 · info1@de.ebmpapst.com · www.ebmpapst.com