R4D250-AC10-03

AC centrifugal fan

forward-curved, single-intake

Nominal data

Type	**R4D250-AC10-03**
Motor	**M4D094-HA**

Phase		3~	3~
Nominal voltage	VAC	400	400
Wiring		Y	Y
Frequency	Hz	50	60
Method of obtaining data		fa	ml
Valid for approval/standard		CE	CE
Speed (rpm)	min^{-1}	1350	1560
Power consumption	W	590	710
Current draw	A	1.17	1.26
Min. back pressure	Pa	0	150
Min. back pressure	in. wg	0	0.6
Max. ambient temperature	°C	80	60
Starting current	A	4	3.7

ml = Max. load · me = Max. efficiency · fa = Free air · cs = Customer specification · ce = Customer equipment
Subject to change

Data according to Commission Regulation (EU) 327/2011 (EN 17166)

		Actual	Req. 2015
01 Overall efficiency η_{es}	%	37.2	34
02 Measurement category		A	
03 Efficiency category		Static	
04 Efficiency grade N		47.2	44
05 Variable speed drive		No	

09 Power consumption P_e	kW	0.26
09 Air flow q_v	m^3/h	1060
09 Pressure increase p_{fs}	Pa	334
10 Speed (rpm) n	min^{-1}	1445
11 Specific ratio*		1.00

Data obtained at optimum efficiency level.
The ErP data is determined using a motor-impeller combination in a standardized measurement setup.

* Specific ratio = 1 + p_{fs} / 100 000 Pa

LU-56377

ebmpapst

AC centrifugal fan

forward-curved, single-intake

Technical description

Weight	8.3 kg
Size	250 mm
Motor size	94
Rotor surface	Painted black
Impeller material	Sheet steel, galvanized
Direction of rotation	Clockwise, viewed toward rotor
Degree of protection	IP54
Insulation class	"F"
Moisture (F) / Environmental (H) protection class	H1
Max. permitted ambient temp. for motor (transport/storage)	+80 °C
Min. permitted ambient temp. for motor (transport/storage)	-40 °C
Installation position	Any
Condensation drainage holes	None
Mode	S1
Motor bearing	Ball bearing
Touch current according to IEC 60990 (measuring circuit Fig. 4, TN system)	<= 3.5 mA
Motor protection	Thermal overload protector (TOP) with basic insulation
With cable	Variable
Protection class	I (with customer connection of protective earth)
Conformity with standards	EN 60034-1 (2004); CE
Approval	EAC

AC centrifugal fan

forward-curved, single-intake

Product drawing

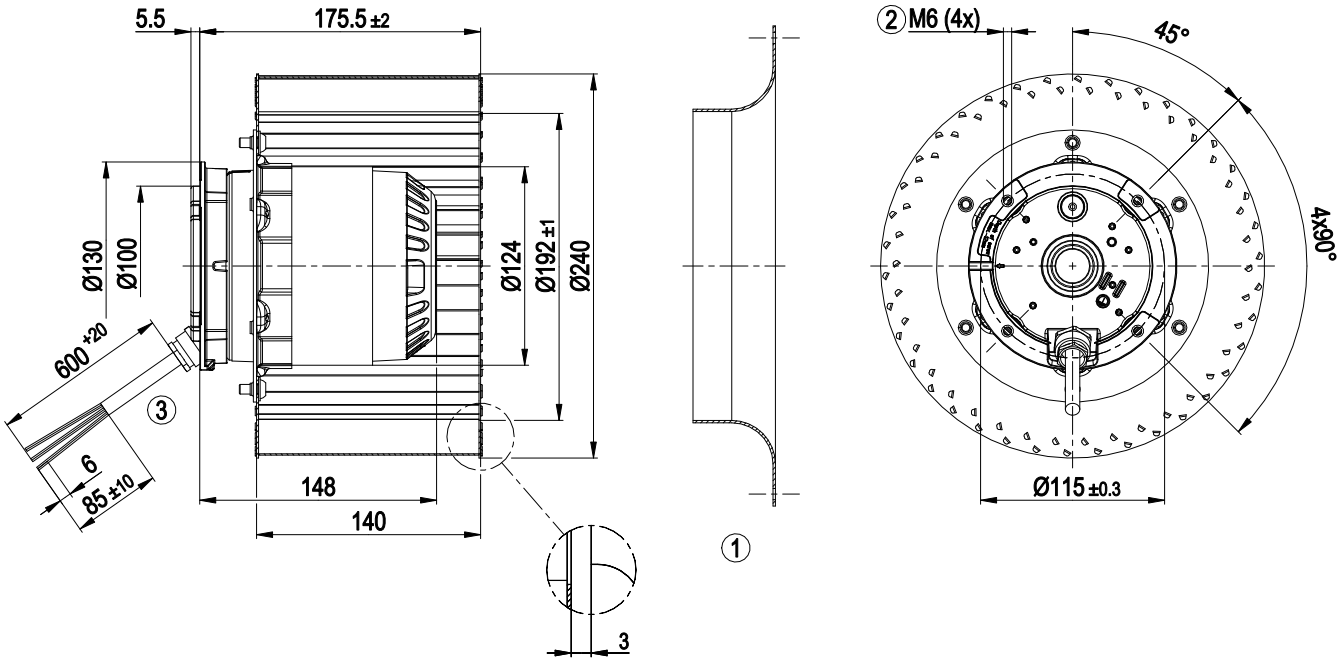

1	Accessory part: Inlet ring 25010-2-4013 not included in scope of delivery
2	Max. clearance for screw 12 mm
3	Cable silicone 6G 0.5 mm²
	6x splice

Accessory part

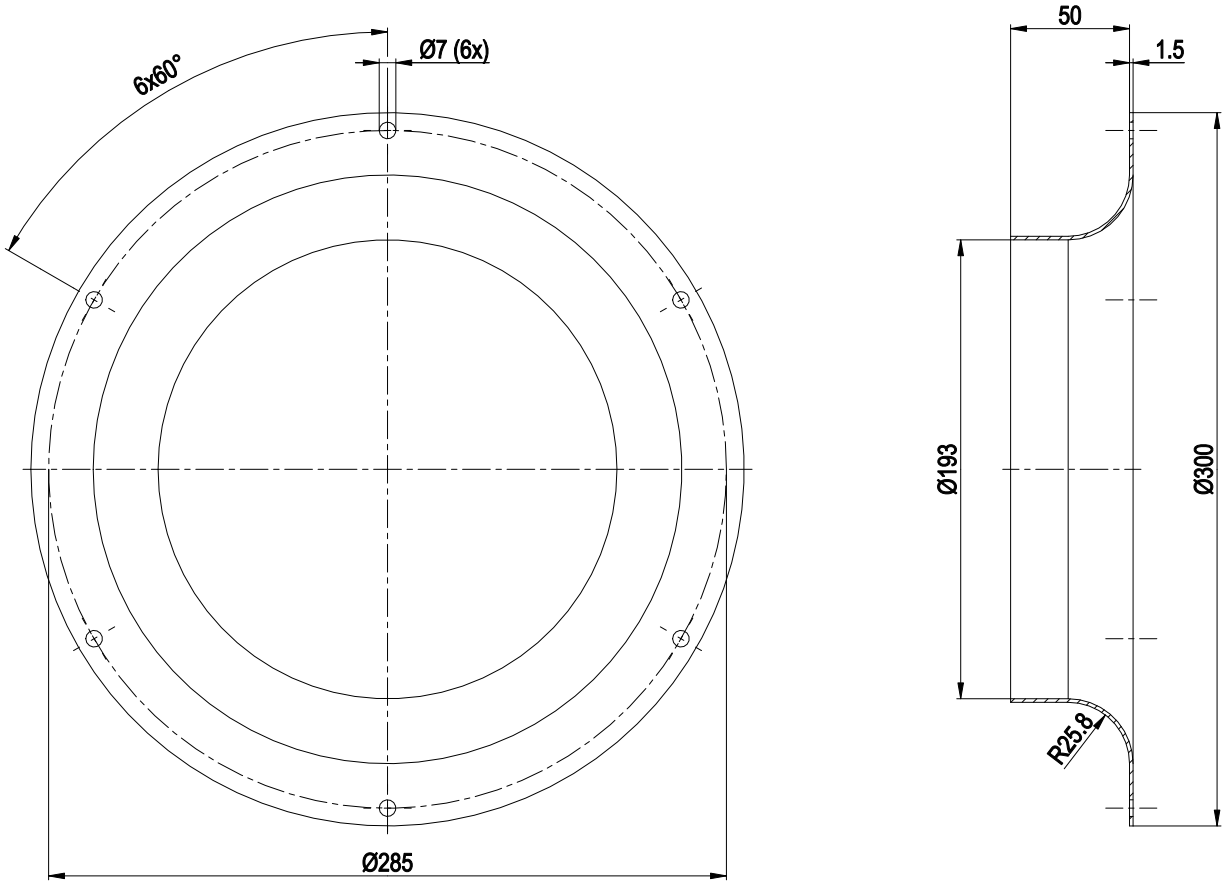

Accessory part: inlet ring 25010-2-4013 not included in scope of delivery

Connection diagram

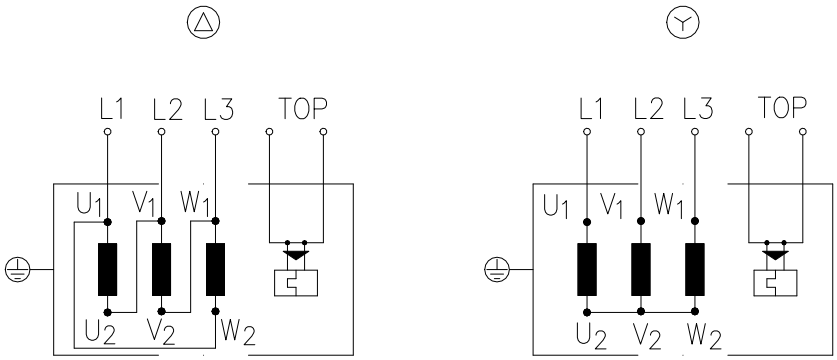

Change of rotation direction by reversing two phases

Δ	Delta connection	Y	Star connection	L1	= U1 = black
L2	= V1 = blue	L3	= W1 = brown	W2	yellow
U2	green	V2	white	TOP	2x gray
PE	green/yellow				

R4D250-AC10-03

AC centrifugal fan

forward-curved, single-intake

Curves: Air performance 50 Hz

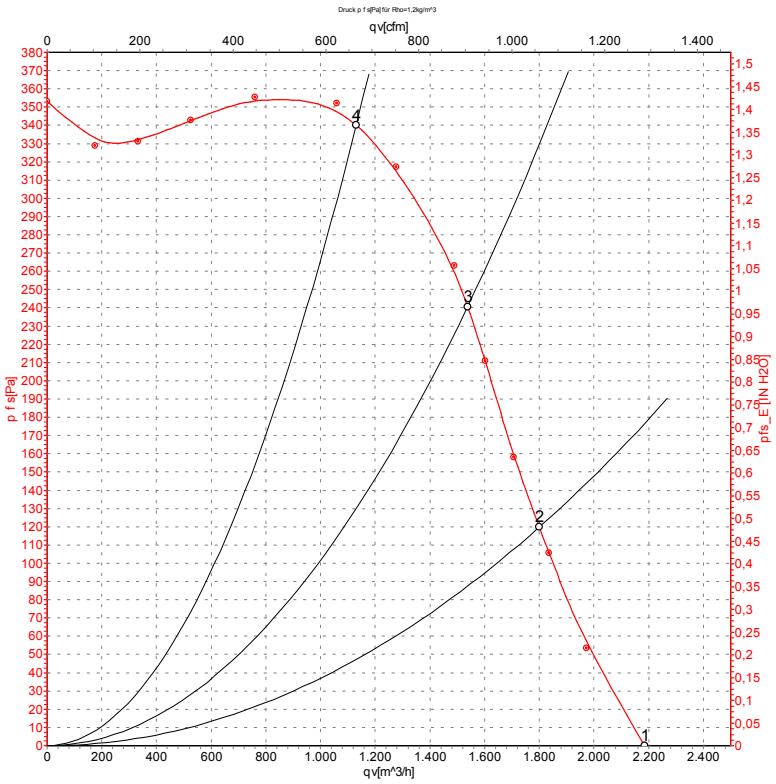

Measurement: LU-56377-1

Air performance measured according to ISO 5801 installation category A. For detailed information on the measurement setup, contact ebm-papst. Intake sound level: Sound power level according to ISO 13347 / sound pressure level measured at 1 m distance from fan axis. The values given are valid under the specified measuring conditions and may vary due to conditions of installation. For deviations from the standard configuration, the parameters have to be checked on the installed unit.

Measured values

	U	f	n	P_e	I	q_V	p_{fs}	q_V	p_{fs}
	V	Hz	min^{-1}	W	A	m^3/h	Pa	cfm	in. wg
1	400	50	1350	590	1.17	2185	0	1285	0.00
2	400	50	1390	467	1.02	1800	120	1060	0.48
3	400	50	1410	391	0.93	1540	240	905	0.96
4	400	50	1440	282	0.84	1130	340	665	1.36

U = Voltage · f = Frequency · n = Speed (rpm) · P_e = Power consumption · I = Current draw · q_V = Air flow · p_{fs} = Pressure increase

ebmpapst

R4D250-AC10-03

AC centrifugal fan

forward-curved, single-intake

Curves: Air performance 60 Hz

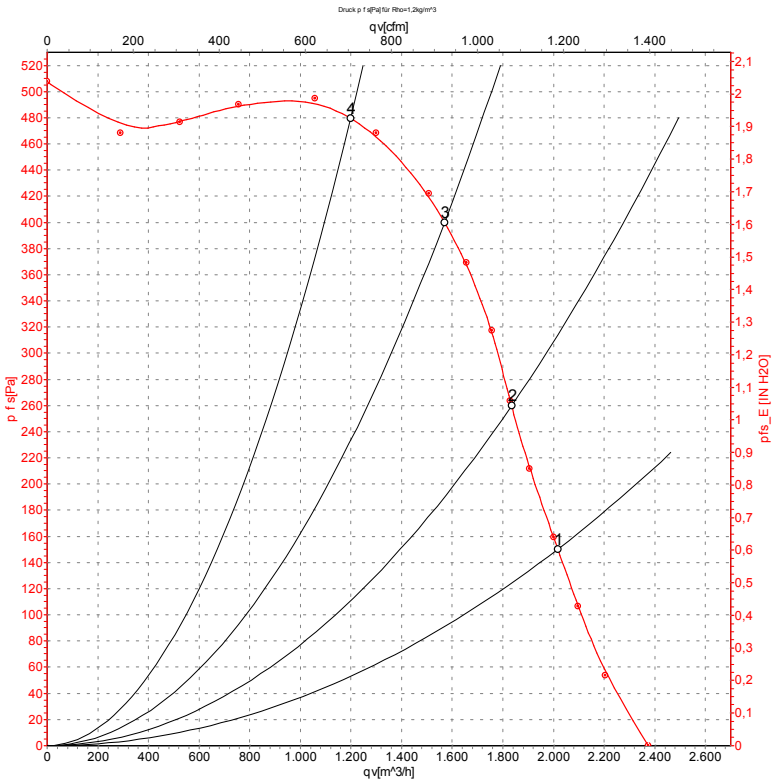

Measurement: LU-56378-1

Air performance measured according to ISO 5801 installation category A. For detailed information on the measurement setup, contact ebm-papst. Intake sound level: Sound power level according to ISO 13347 / sound pressure level measured at 1 m distance from fan axis. The values given are valid under the specified measuring conditions and may vary due to conditions of installation. For deviations from the standard configuration, the parameters have to be checked on the installed unit.

Measured values

	U	f	n	P_e	I	q_V	p_{fs}	q_V	p_{fs}
	V	Hz	min^{-1}	W	A	m^3/h	Pa	cfm	in. wg
1	400	60	1560	710	1.26	2015	150	1185	0.60
2	400	60	1590	635	1.14	1835	260	1080	1.04
3	400	60	1640	516	0.97	1570	400	925	1.61
4	400	60	1690	380	0.80	1200	480	705	1.93

U = Voltage · f = Frequency · n = Speed (rpm) · P_e = Power consumption · I = Current draw · q_V = Air flow · p_{fs} = Pressure increase

ebmpapst