R4D355-AH11-05

AC centrifugal fan

backward-curved, single-intake

Nominal data

Type	**R4D355-AH11-05**		
Motor	**M4D074-EI**		
Phase		3~	3~
Nominal voltage	VAC	400	400
Wiring		Y	Y
Frequency	Hz	50	60
Method of obtaining data		fa	fa
Valid for approval/standard		CE	CE
Speed (rpm)	min^{-1}	1400	1600
Power consumption	W	170	235
Current draw	A	0.52	0.50
Min. back pressure	Pa	0	0
Min. back pressure	inH2O	0	0
Min. ambient temperature	°C	-25	-25
Max. ambient temperature	°C	70	65
Starting current	A	1.5	1.45

ml = Max. load · me = Max. efficiency · fa = Free air · cs = Customer specification · ce = Customer equipment
Subject to change

Data according to ErP Directive

		Actual	Req. 2015
01 Overall efficiency η_{es}	%	44.8	44.8
02 Measurement category		A	
03 Efficiency category		Static	
04 Efficiency grade N		62	62
05 Variable speed drive		No	

09 Power consumption P_e	kW	0.23
09 Air flow q_v	m³/h	1445
09 Pressure increase p_{fs}	Pa	251
10 Speed (rpm) n	min^{-1}	1350
11 Specific ratio*		1.00

Data obtained at optimum efficiency level.
The ErP data is determined using a motor-impeller combination in a standardized measurement setup.

* Specific ratio = 1 + p_{fs} / 100 000 Pa

LU-106558

AC centrifugal fan

backward-curved, single-intake

Technical description

Weight	4.8 kg
Fan size	355 mm
Rotor surface	Painted black
Impeller material	Sheet aluminum, laser-welded
Number of blades	6
Direction of rotation	Clockwise, viewed toward rotor
Degree of protection	IP44; installation- and position-dependent as per EN 60034-5
Insulation class	"F"
Moisture (F) / Environmental (H) protection class	H0+
Max. permitted ambient temp. for motor (transport/storage)	+ 80 °C
Min. permitted ambient temp. for motor (transport/storage)	- 40 °C
Installation position	Shaft horizontal or rotor on bottom; rotor on top on request
Condensation drainage holes	On rotor side
Mode	S1
Motor bearing	Ball bearing
Touch current according to IEC 60990 (measuring circuit Fig. 4, TN system)	< 0.75 mA
Motor protection	Thermal overload protector (TOP) with basic insulation
With cable	Variable
Protection class	I (with customer connection of protective earth)
Conformity with standards	EN 60335-1; CE
Approval	CCC

ebmpapst

AC centrifugal fan

backward-curved, single-intake

Product drawing

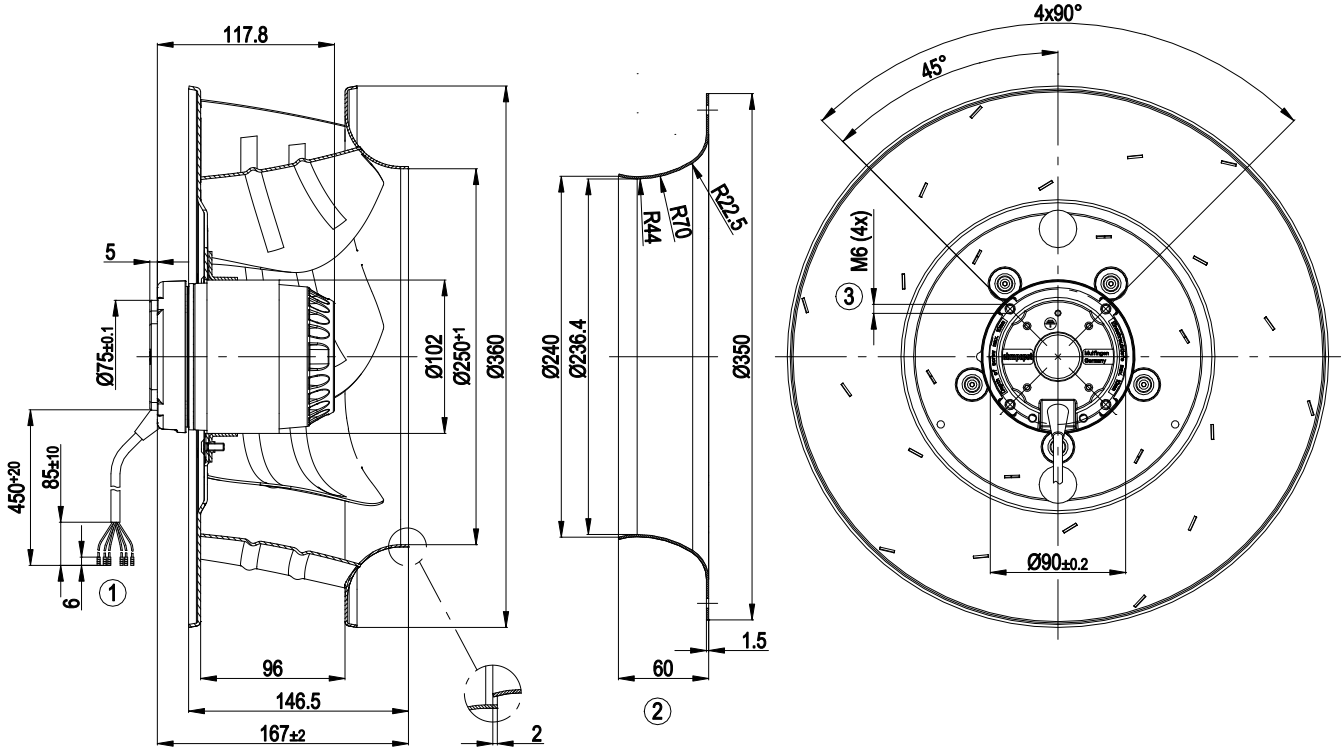

1	Cable silicone 6 x 0.5 mm², 6 x crimped splices
2	Accessory part: Inlet ring 35560-2-4013 not included in scope of delivery, other inlet rings on request
3	Max. clearance for screw 10 mm

AC centrifugal fan

backward-curved, single-intake

Connection diagram

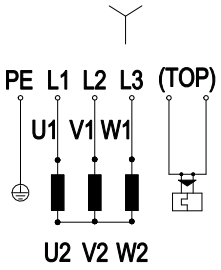

L1	= U1 = black	L2	= V1 = blue	L3	= W1 = brown
PE	green/yellow	TOP	2x gray	Y	Star connection

R4D355-AH11-05

AC centrifugal fan

backward-curved, single-intake

Curves: Air performance 50 Hz

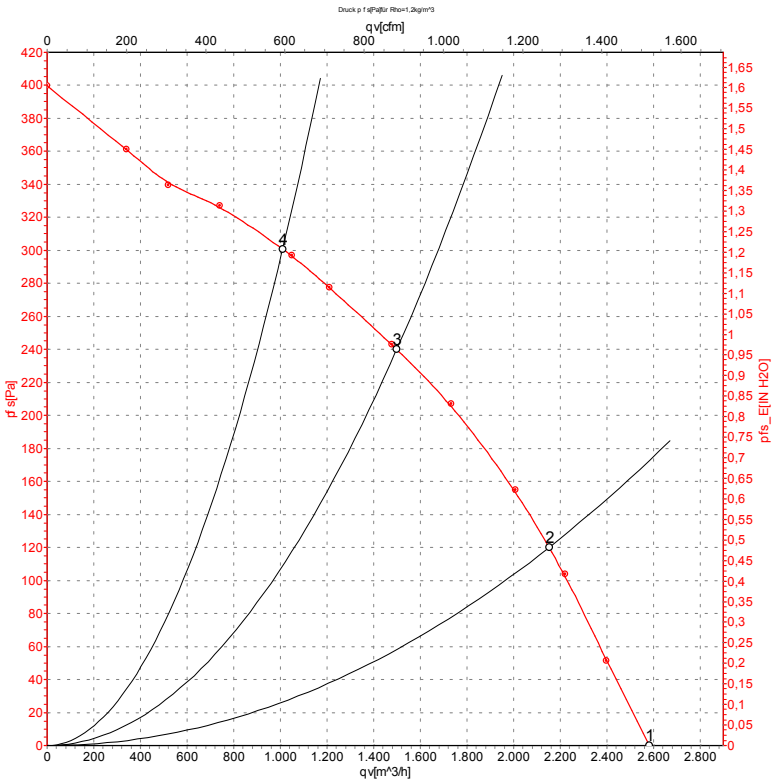

Measurement: LU-54350-1

Air performance measured according to ISO 5801 installation category A. For detailed information on the measurement setup, contact ebm-papst. Intake sound level: Sound power level according to ISO 13347 / sound pressure level measured at 1 m distance from fan axis. The values given are valid under the specified measuring conditions and may vary due to conditions of installation. For deviations from the standard configuration, the parameters have to be checked on the installed unit.

Measured values

	U	f	n	P_e	I	qv	p_{fs}	qv	p_{fs}
	V	Hz	min^{-1}	W	A	m^3/h	Pa	CFM	inH2O
1	400	50	1400	170	0.52	2585	0	1520	0.00
2	400	50	1375	211	0.55	2155	120	1265	0.48
3	400	50	1360	231	0.57	1500	240	880	0.96
4	400	50	1370	215	0.54	1010	300	595	1.20

U = Power supply · f = Frequency · n = Speed (rpm) · P_e = Power consumption · I = Current draw · qv = Air flow · p_{fs} = Pressure increase

AC centrifugal fan

backward-curved, single-intake

Curves: Air performance 60 Hz

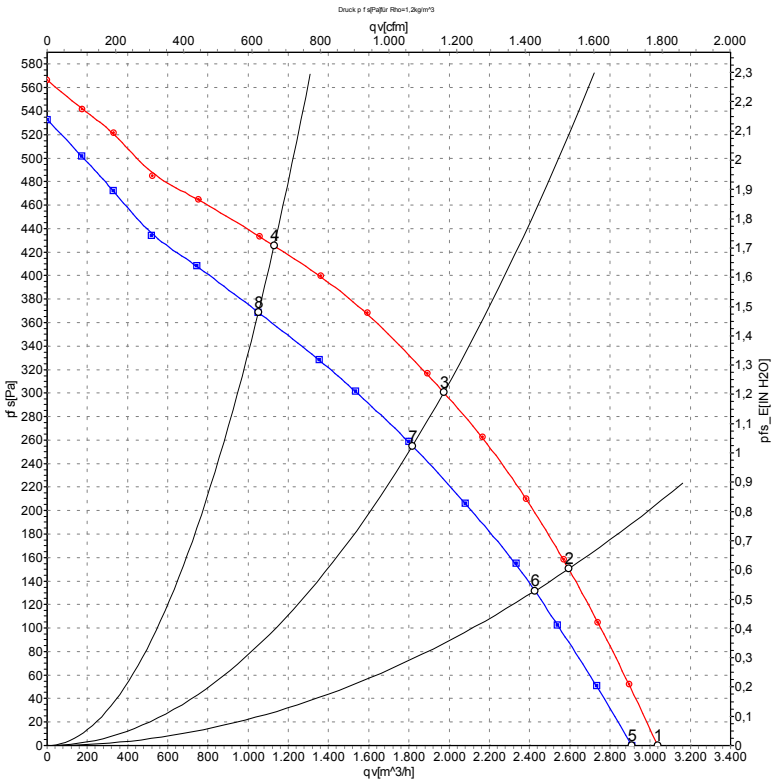

Measurement: LU-54436-1
Measurement: LU-54351-1

Air performance measured according to ISO 5801 installation category A. For detailed information on the measurement setup, contact ebm-papst. Intake sound level: Sound power level according to ISO 13347 / sound pressure level measured at 1 m distance from fan axis. The values given are valid under the specified measuring conditions and may vary due to conditions of installation. For deviations from the standard configuration, the parameters have to be checked on the installed unit.

Measured values

	U	f	n	P_e	I	qv	p_{fs}	qv	p_{fs}
	V	Hz	min^{-1}	W	A	m^3/h	Pa	CFM	inH2O
1	480	60	1670	260	0.55	3040	0	1790	0.00
2	480	60	1625	316	0.58	2595	150	1525	0.60
3	480	60	1595	354	0.61	1975	300	1160	1.20
4	480	60	1620	325	0.58	1130	425	665	1.71
5	400	60	1600	235	0.50	2910	0	1710	0.00
6	400	60	1525	287	0.57	2425	132	1430	0.53
7	400	60	1475	318	0.62	1815	256	1070	1.03
8	400	60	1510	294	0.58	1050	369	620	1.48

U = Power supply · f = Frequency · n = Speed (rpm) · P_e = Power consumption · I = Current draw · qv = Air flow · p_{fs} = Pressure increase

ebmpapst