R4E250-AH01-05

AC centrifugal fan

backward curved, single inlet

Phone: +49(0)7938/81-0
Fax: +49(0)7938/81-110

Nominal data

Type	**R4E250-AH01-05**
Motor	**M4E068-CF**

Phase		1~	1~
Nominal voltage	[V]	230	230
Frequency	[Hz]	50	60
Type of data definition		rfa	rfa
Valid for approval / standard		CE	CE
Speed	[min^{-1}]	1400	1600
Power input	[W]	43	43
Current draw	[A]	0.20	0.20
Motor capacitor	[µF]	1.5	1.0
Capacitor voltage	[VDB]	400	400
Capacitor standard		P0 (CE)	P0 (CE)
Min. back pressure	[Pa]	0	0
Max. ambient temperature	[°C]	60	60

ml = max. load · me = max. efficiency · rfa = running at free air · cs = customer specs · cu = customer unit
Subject to alterations

ebmpapst

AC centrifugal fan

backward curved, single inlet

Technical features

Leackage current	< 0.75 mA
Size	250 mm
Operation mode	S1
Direction of rotation	Clockwise, seen on rotor
Mounting position	Shaft horizontal or rotor on bottom; rotor on top on request
Humidity class	F1-2
Insulation class	"B"
Cable exit	Variable
Condensate discharge holes	Rotor-side
Bearing motor	Ball bearing
Mass	1.96 kg
Material of impeller	PA plastic, black
Motor protection	Thermal overload protector (TOP) wired internally
Product conforming to standard	CE; EN 60335-1
Surface of rotor	Coated in black
Number of blades	11
Type of protection	IP 44; Depending on installation and position as per EN 60034-5
Protection class	I
Max. permissible ambient motor temp. (transp./ storage)	+ 80 °C
Min. permissible ambient motor temp. (transp./storage)	- 40 °C
Approval	CCC; GOST

ebmpapst

AC centrifugal fan

backward curved, single inlet

Product drawing

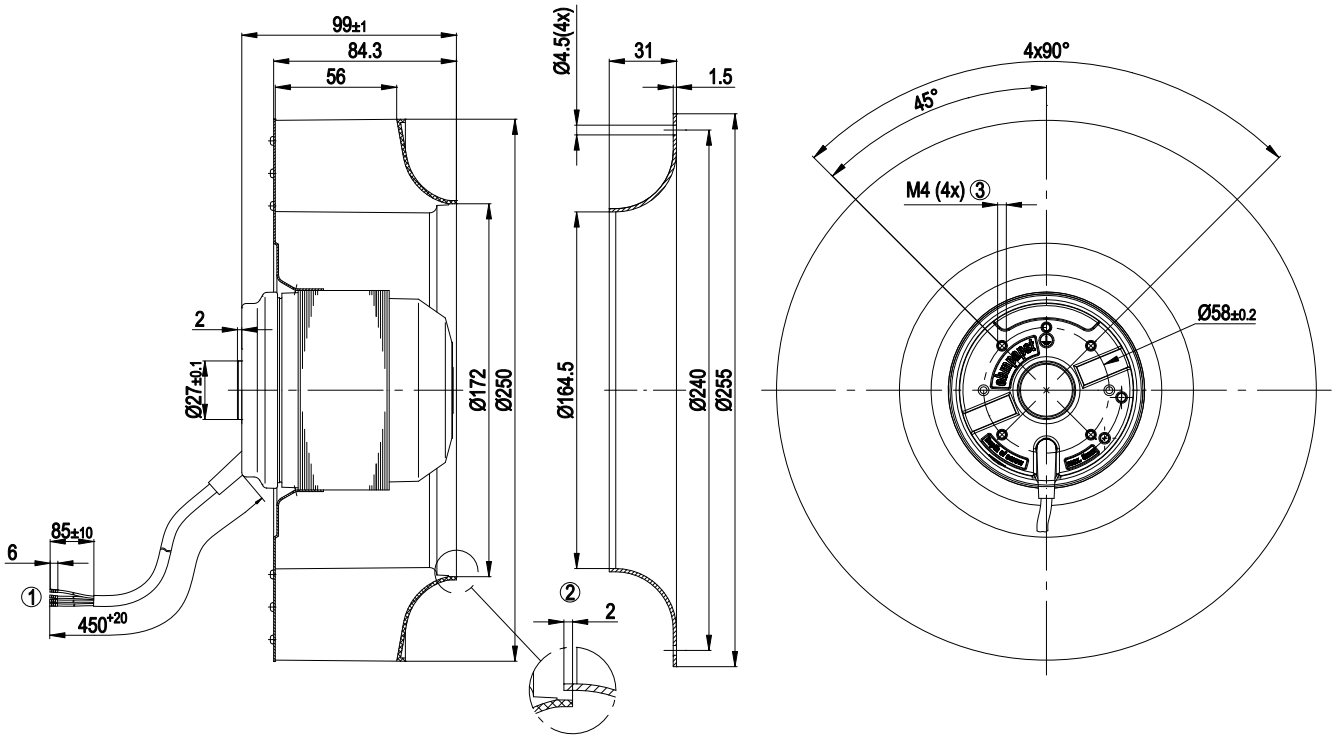

1	Connection line PVC 4 x 0.5 mm²; 4 x brass lead tips crimped
2	Accessory part: Inlet nozzle 96359-2-4013, not included in the standard scope of delivery
3	Depth of screw max. 5 mm

Connection screen

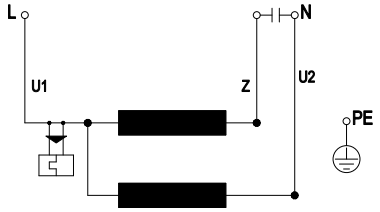

U1	blue	Z	brown	U2	black
PE	green/yellow				

ebmpapst

Charts: Air flow 50 Hz

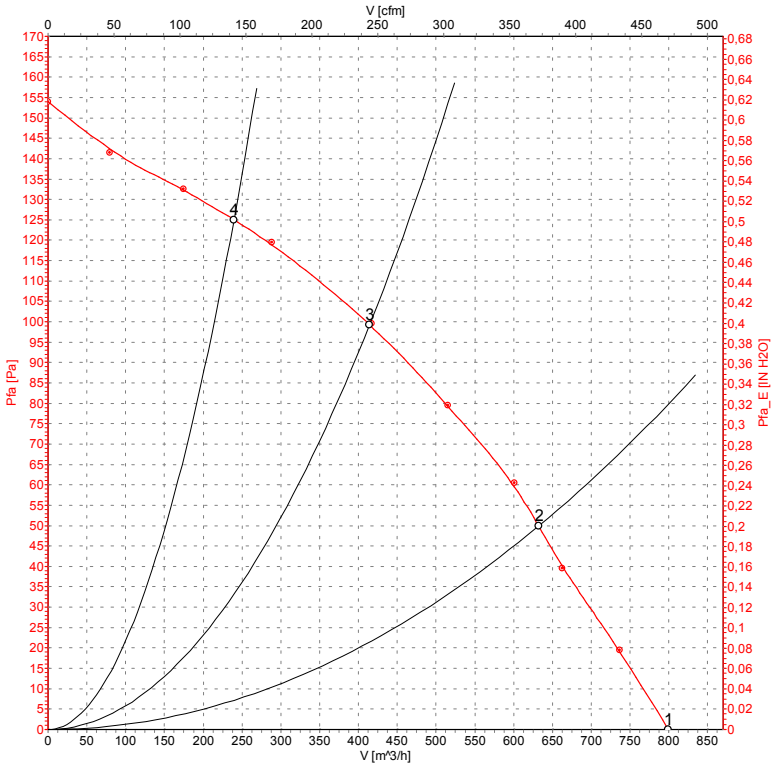

Measurement: LU-57245

Measured values

	U	f	n	P_1	I	$\mathring{V}$	p_{fa}
	[V]	[Hz]	[min^{-1}]	[W]	[A]	[m^3/h]	[Pa]
1	230	50	1400	43	0.20	800	0
2	230	50	1370	45	0.21	630	50
3	230	50	1355	47	0.22	415	100
4	230	50	1370	45	0.21	240	125

AC centrifugal fan

backward curved, single inlet

Charts: Air flow 60 Hz

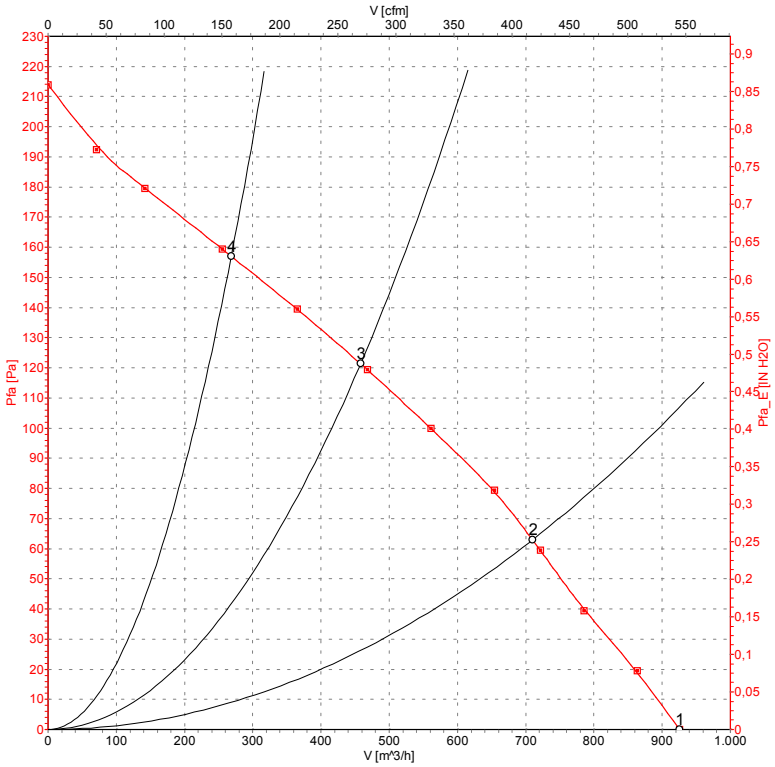

Measurement: LU-57246

Measured values

	U	f	n	P_1	I	$\mathring{V}$	p_{fa}
	[V]	[Hz]	[min^{-1}]	[W]	[A]	[m^3/h]	[Pa]
1	230	60	1600	43	0.20	925	0
2	230	60	1525	50	0.23	710	63
3	230	60	1485	53	0.24	460	122
4	230	60	1530	50	0.22	270	157

ebmpapst