AC axial fans 2 poles

S-Range, Ø 300

- **Material:** sheet steel (coated in black)
- **Direction of rotation:** direction of air flow "V" counter-clockwise, direction of air flow "A" clockwise
- **Type of protection:** IP 44
- **Option:** also available with terminal box

ebm-papst · Mulfingen

Nominal data

Type	Motor	Characteristic	Voltage VAC	Frequency Hz	Air flow m³/h	Speed/rpm min⁻¹	Power input W	Current draw A	Capacitor µF/VDB	Sound pressure level dB(A)	Max. back pressure Pa	Perm. amb. temp. °C	Mass kg
*2D 300[1]	M2D074-DF	1	230/400	50	3130	2580	210	0,36	---	72	200	55	3,0
			230/400	60	3350	2750	300	0,48	---	73	125	40	
*2E 300	M2E074-DF	2	230	50	3410	2700	230	1,10	8,0/400	73	200	50	3,0
			230	60	3740	3000	350	1,55	8,0/400	76	50	40	

subject to alterations

[1] current draw established at 400 VAC (Y)

		n [min⁻¹]	P_1 [W]
1	1	2530	228
1	2	2400	273

Characteristics

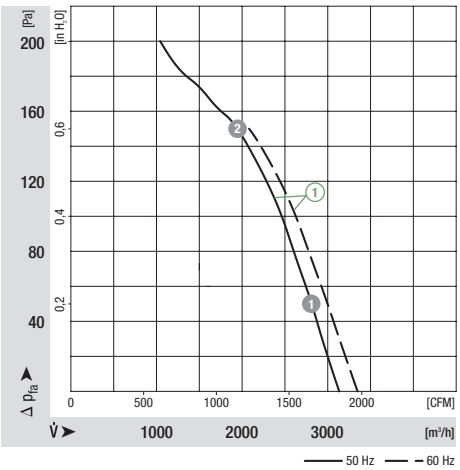

		n [min⁻¹]	P_1 [W]
2	1	2680	252
2	2	2560	290

Characteristics

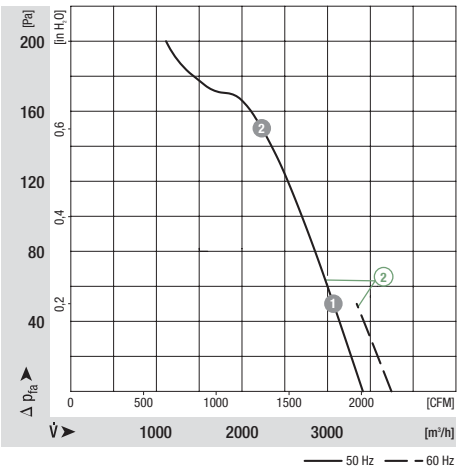

ebmpapst

Selection	Cable exit	Direction of air flow			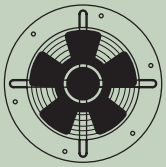	
Type	**S/A/B**					
***2D 300**	B	"V"	A2D300-AP02 -01	S2D300-BP02 -30	W2D300-CP02 -30	S2D300-AP02 -30
		"A"	A2D300-AP02 -02	S2D300-BP02 -31	W2D300-CP02 -31	S2D300-AP02 -31
***2E 300**	B	"V"	A2E 300-AP02 -01	S2E 300-BP02 -30	W2E 300-CP02 -30	S2E 300-AP02 -30
		"A"	A2E 300-AP02 -02	S2E 300-BP02 -31	W2E 300-CP02 -31	S2E 300-AP02 -31

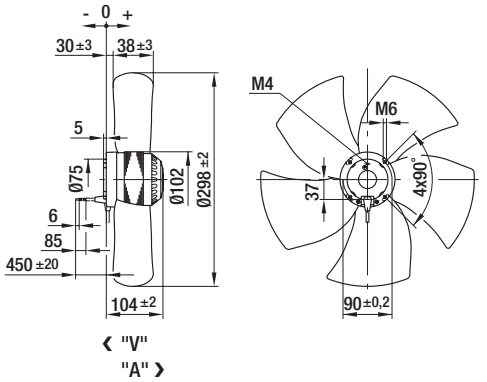

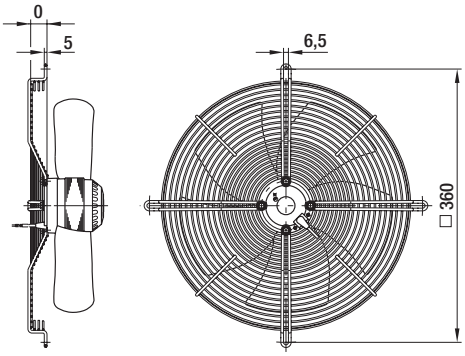

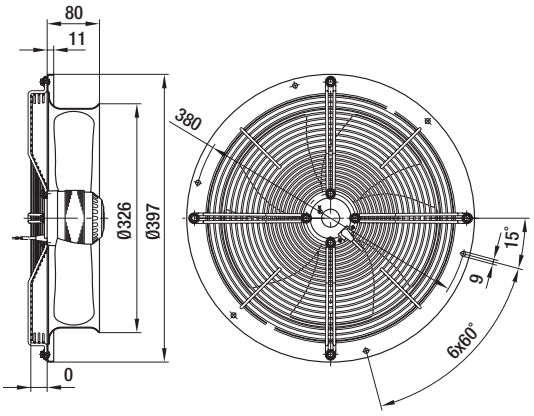

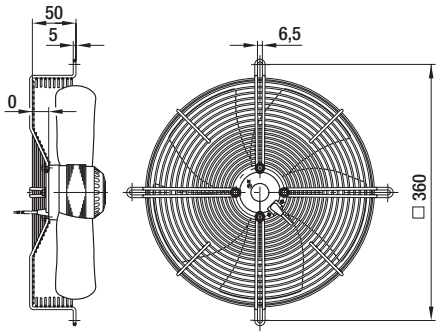

Guard grille
p. 196 f.

Wall ring
p. 206 f.

Capacitor
p. 214 f.