S2E250-AL06-12

AC axial fan

sickle-shaped blades (S series)

with guard grille for short nozzle

ebm-papst Mulfingen GmbH & Co. KG
Bachmühle 2 · D-74673 Mulfingen
Phone +49 7938 81-0
Fax +49 7938 81-110
info1@de.ebmpapst.com
www.ebmpapst.com

Nominal data

Type	**S2E250-AL06-12**
Motor	**M2E068-CF**

Phase		1~	1~
Nominal voltage	VAC	230	230
Frequency	Hz	50	60
Method of obtaining data		fa	fa
Valid for approval/standard		CE	CE
Speed (rpm)	min^{-1}	2450	2600
Power consumption	W	115	150
Current draw	A	0.51	0.66
Capacitor	µF	3	3
Capacitor voltage	VDB	400	400
Capacitor standard		P0 (CE)	P0 (CE)
Max. back pressure	Pa	120	85
Max. back pressure	inH2O	0.48	0.34
Max. ambient temperature	°C	65	50
Starting current	A	0.88	0.87

ml = Max. load · me = Max. efficiency · fa = Free air · cs = Customer specification · ce = Customer equipment
Subject to change

AC axial fan

sickle-shaped blades (S series)

with guard grille for short nozzle

Technical description

Weight	2.5 kg
Fan size	250 mm
Rotor surface	Painted black
Blade material	Sheet steel, painted black
Guard grille material	Steel, coated with black plastic (RAL 9005)
Number of blades	7
Airflow direction	"V"
Direction of rotation	Counterclockwise, viewed toward rotor
Degree of protection	IP44; installation- and position-dependent as per EN 60034-5
Insulation class	"B"
Moisture (F) / Environmental (H) protection class	H0+
Max. permitted ambient temp. for motor (transport/storage)	+ 80 °C
Min. permitted ambient temp. for motor (transport/storage)	- 40 °C
Installation position	Any
Condensation drainage holes	On rotor side
Mode	S1
Motor bearing	Ball bearing
Touch current according to IEC 60990 (measuring circuit Fig. 4, TN system)	< 0.75 mA
Motor protection	Thermal overload protector (TOP) internally connected
With cable	Variable
Protection class	I (with customer connection of protective earth)
Conformity with standards	EN 60335-1; CE

S2E250-AL06-12

AC axial fan

sickle-shaped blades (S series)

with guard grille for short nozzle

Product drawing

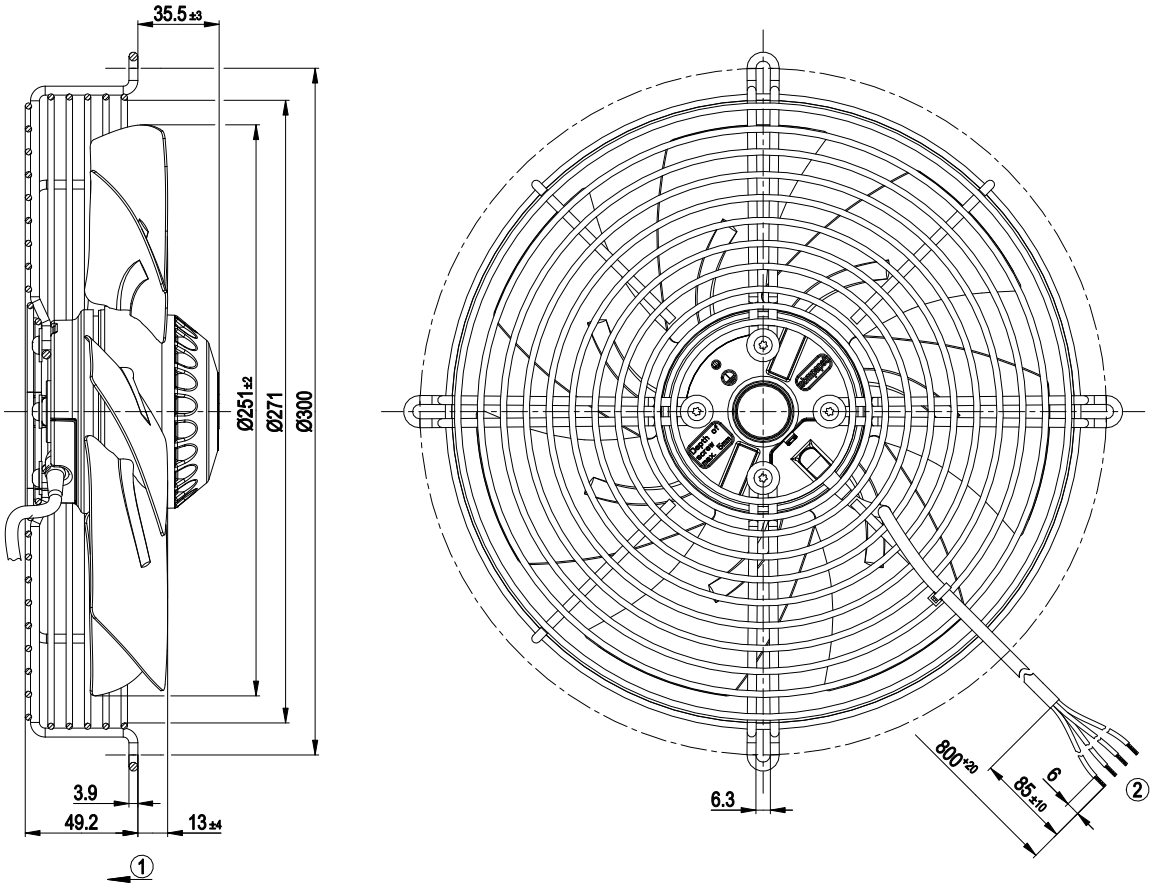

1	Direction of air flow "V"
2	Cable PVC 4G 0.5 mm², 4x crimped splices

Connection diagram

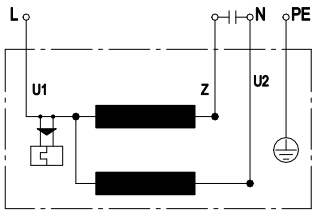

U1	blue	Z	brown	U2	black
PE	green/yellow				

ebmpapst

S2E250-AL06-12

AC axial fan

sickle-shaped blades (S series)

with guard grille for short nozzle

Curves: Air performance 50 Hz

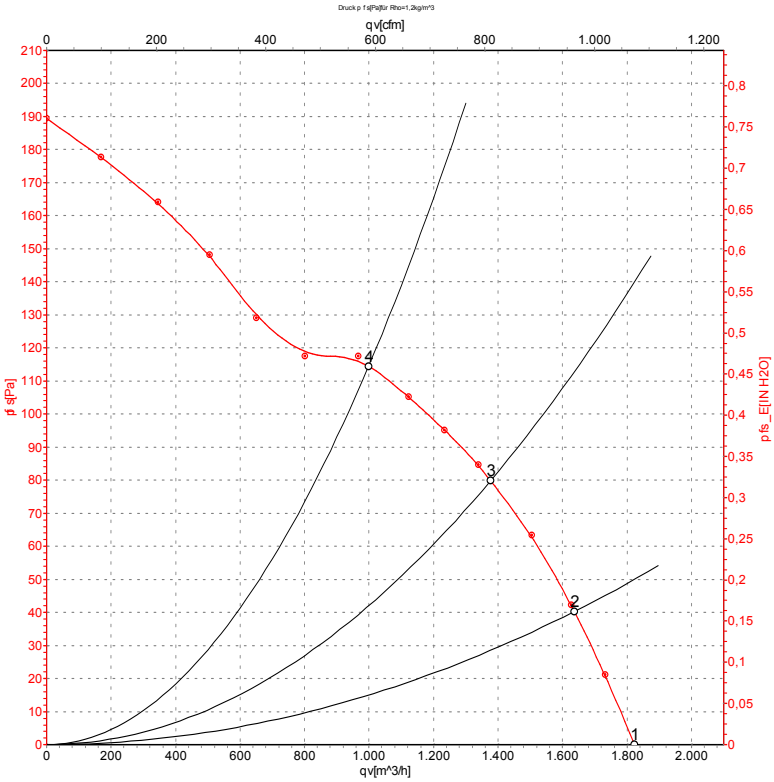

Measurement: LU-59608-1

Air performance measured according to ISO 5801 installation category A. For detailed information on the measurement setup, contact ebm-papst. Intake sound level: Sound power level according to ISO 13347 / sound pressure level measured at 1 m distance from fan axis. The values given are valid under the specified measuring conditions and may vary due to conditions of installation. For deviations from the standard configuration, the parameters have to be checked on the installed unit.

Measured values

	U	f	n	P_e	I	qv	p_{fs}	qv	p_{fs}
	V	Hz	min^{-1}	W	A	m^3/h	Pa	CFM	inH2O
1	230	50	2450	115	0.51	1820	0	1070	0.00
2	230	50	2420	120	0.52	1635	40	965	0.16
3	230	50	2335	125	0.56	1375	80	810	0.32
4	230	50	2270	134	0.58	1000	115	585	0.46

U = Power supply · f = Frequency · n = Speed (rpm) · P_e = Power consumption · I = Current draw · qv = Air flow · p_{fs} = Pressure increase

S2E250-AL06-12

AC axial fan

sickle-shaped blades (S series)

with guard grille for short nozzle

Curves: Air performance 60 Hz

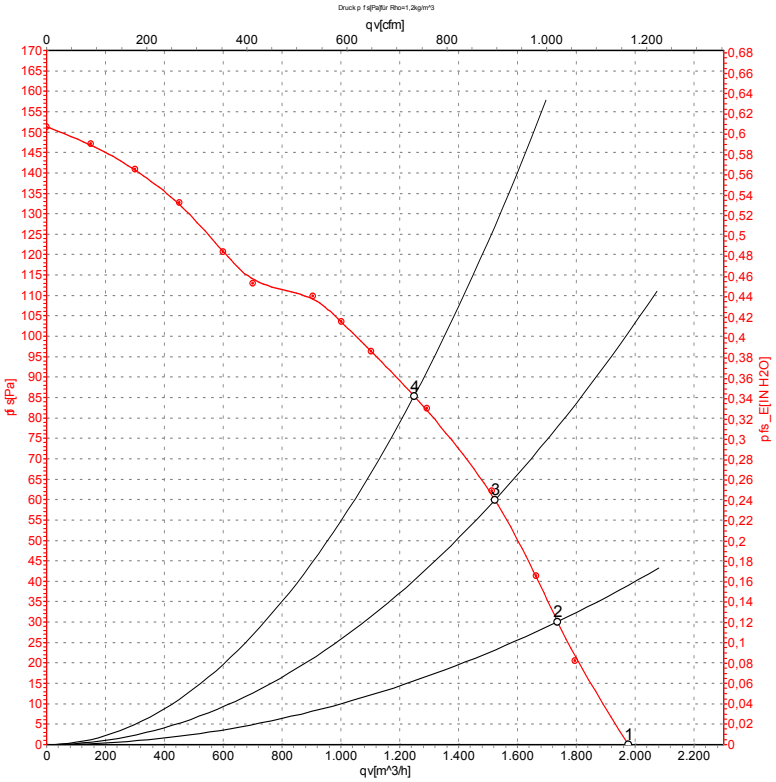

Measurement: LU-59609-1

Air performance measured according to ISO 5801 installation category A. For detailed information on the measurement setup, contact ebm-papst. Intake sound level: Sound power level according to ISO 13347 / sound pressure level measured at 1 m distance from fan axis. The values given are valid under the specified measuring conditions and may vary due to conditions of installation. For deviations from the standard configuration, the parameters have to be checked on the installed unit.

Measured values

	U	f	n	P_e	I	qv	p_{fs}	qv	p_{fs}
	V	Hz	min^{-1}	W	A	m^3/h	Pa	CFM	inH2O
1	230	60	2600	150	0.66	1970	0	1160	0.00
2	230	60	2525	156	0.68	1735	30	1020	0.12
3	230	60	2415	160	0.70	1525	60	895	0.24
4	230	60	2300	164	0.71	1250	85	735	0.34

U = Power supply · f = Frequency · n = Speed (rpm) · P_e = Power consumption · I = Current draw · qv = Air flow · p_{fs} = Pressure increase

ebmpapst