S3G800-BS39-10

TRANE SAS

EC axial fan - HyBlade

sickled blades (S series)

with guard grille for full nozzle

ebm-papst Mulfingen GmbH & Co. KG
Bachmühle 2 · D-74673 Mulfingen
Phone +49 7938 81-0
Fax +49 7938 81-110
info1@de.ebmpapst.com
www.ebmpapst.com

Nominal data

Type	**S3G800-BS39-10**
Motor	**M3G150-FF**

Phase		3~
Nominal voltage	VAC	400
Nominal voltage range	VAC	380 .. 480
Frequency	Hz	50/60
Type of data definition		ml
Speed	min^{-1}	1020
Power input	W	1950
Current draw	A	3.0
Max. back pressure	Pa	80
Min. ambient temperature	°C	-25
Max. ambient temperature	°C	70

ml = Max. load · me = Max. efficiency · fa = Running at free air · cs = Customer specs · cu = Customer unit
Subject to alterations

Data according to ErP directive

Installation category	A
Efficiency category	Static
Variable speed drive	Yes
Specific ratio*	1.00

* Specific ratio = 1 + p_{fs} / 100 000 Pa

		Actual	Request 2015
Overall efficiency η_{es}	%	43.4	36
Efficiency grade N		47.4	40
Power input P_{ed}	kW	2.37	
Air flow q_v	m^3/h	17695	
Pressure increase p_{fs}	Pa	198	
Speed n	min^{-1}	1025	

Data definition with optimum efficiency. LU-163024
The ErP data is determined using a motor-impeller combination in a standardised measurement configuration.

S3G800-BS39-10

TRANE SAS

EC axial fan - HyBlade

sickled blades (S series)

with guard grille for full nozzle

Technical features

Mass	32.9 kg
Size	800 mm
Surface of rotor	Coated in black
Material of electronics housing	Die-cast aluminium, coated in black
Material of blades	Aluminium sheet insert, sprayed with PP plastic
Material of guard grille	Steel, coated in black plastic (RAL9005)
Number of blades	5
Blade angle	0°
Direction of air flow	"V"
Direction of rotation	Clockwise, seen on rotor
Type of protection	IP 54
Insulation class	"F"
Humidity class	F4-1
Max. permissible ambient motor temp. (transp./ storage)	+80 °C
Min. permissible ambient motor temp. (transp./storage)	-40 °C
Mounting position	Shaft horizontal or rotor on bottom
Condensate discharge holes	Rotor-side
Operation mode	S1
Motor bearing	Ball bearing
Technical features	- Output 10 VDC, max. 10 mA - Output 20 VDC, max. 50 mA - Output for slave 0-10 V - Operation and alarm display - Input for sensor 0-10 V or 4-20 mA - External 24 V input (programming) - External release input - Alarm relay - Integrated PID controller - Motor current limit - PFC, passive - RS485 MODBUS RTU - Soft start - Control input 0-10 VDC / PWM - Control interface with SELV potential safely disconnected from the mains - Over-temperature protected electronics / motor - Line undervoltage / phase failure detection
EMC interference immunity	Acc. to EN 61000-6-2 (industrial environment)
EMC interference emission	Acc. to EN 61000-6-3 (household environment), except EN 61000-3-2 for professionally used devices with a total rated power greater than 1 kW
Touch current acc. IEC 60990 (measuring network Fig. 4, TN system)	<= 3.5 mA
Motor protection	Reverse polarity and locked-rotor protection
Protection class	I (if protective earth is connected by customer)
Product conforming to standard	EN 61800-5-1; CE
Approval	EAC

ebmpapst

S3G800-BS39-10

TRANE SAS

EC axial fan - HyBlade

sickled blades (S series)

with guard grille for full nozzle

Product drawing

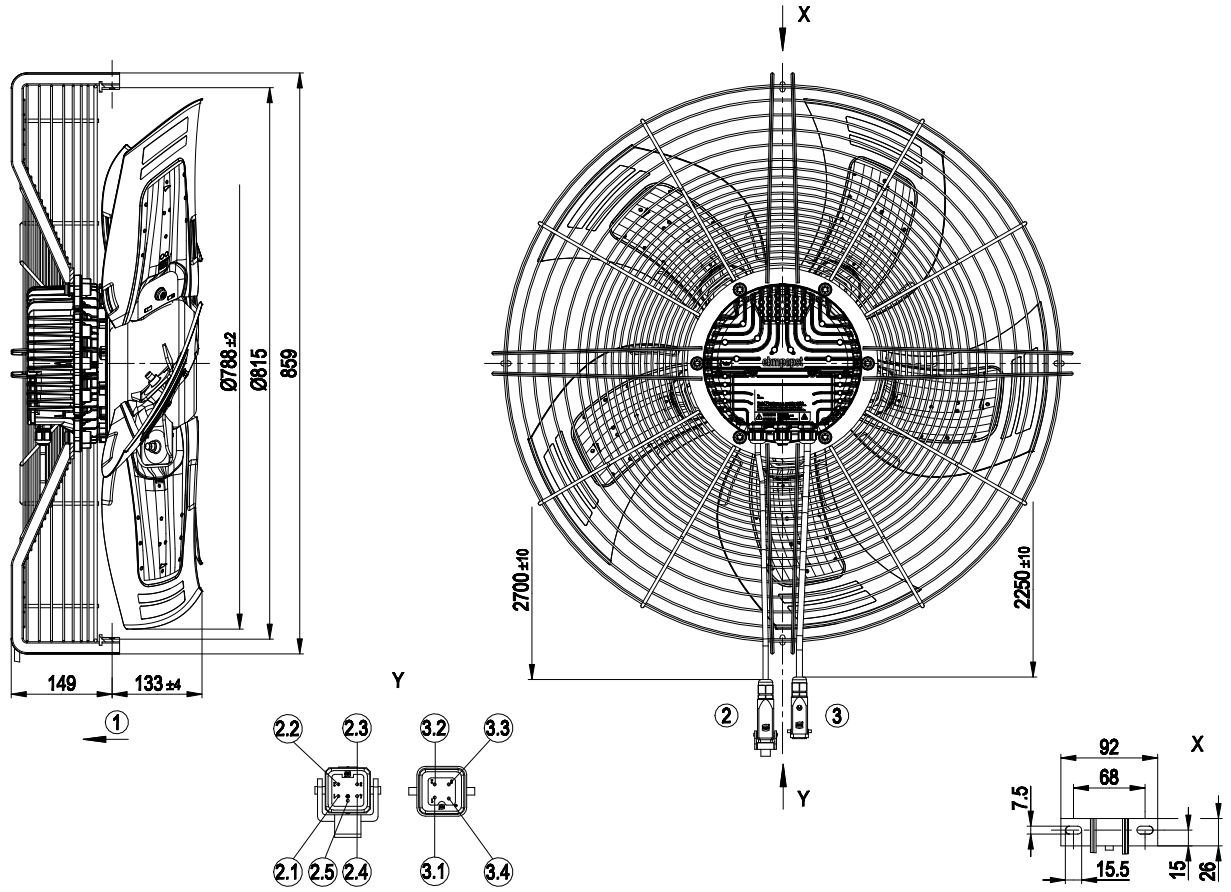

1	Direction of air flow "V"
2	Connection line Ölflex Heat 105 MC 4G 1.0 mm² with connector housing WESTEC 7803.6231.1 and 5-pole pin insert WESTEC 7204.6102.4
2.1	not used
2.2	Din 1
2.3	Ain 1 U
2.4	GND
2.5	not used
3	Connection line Ölflex Heat 105 MC 4G 1.5 mm² with connector housing WESTEC 7803.6227.1 and 4-pole pin insert WESTEC 7203.6101.0
3.1	L1
3.2	L2
3.3	L3
3.4	PE

EC axial fan - HyBlade

sickled blades (S series)

with guard grille for full nozzle

Connection screen

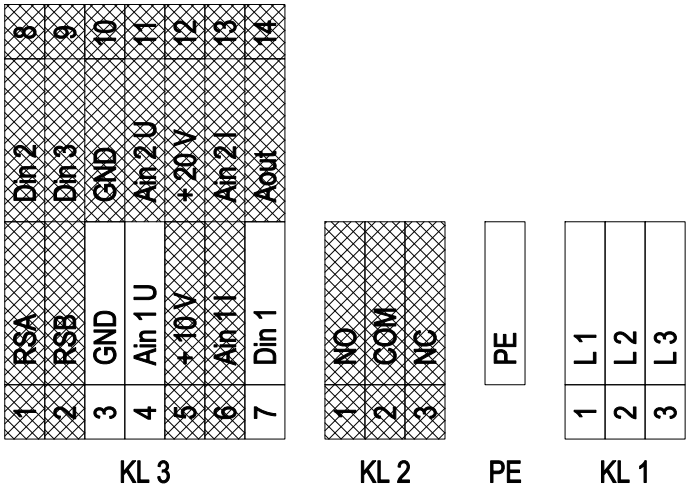

grey shaded => not brought out via leads

No.	Conn.	Designation	Function / assignment
KL 1	1	L1	Mains connection, power supply 3-phase 380-480 VAC; 50/60 Hz
KL 1	2	L2	Mains connection, power supply 3-phase 380-480 VAC; 50/60 Hz
KL 1	3	L3	Mains connection, power supply 3-phase 380-480 VAC; 50/60 Hz
PE		PE	Earth connection, PE connection
KL 2	1	NO	Status relay, floating status contact; make for failure
KL2	2	COM	Status relay; floating status contact; changeover contact; common connection; contact rating 250 VAC / max. 2 A (AC1) / min. 10 mA
KL2	3	NC	Status relay, floating status contact; break for failure
KL 3	1	RSA	Bus connection RS-485, RSA, MODBUS RTU; SELV
KL 3	2	RSB	Bus connection RS-485, RSB, MODBUS RTU; SELV
KL 3	3 / 10	GND	Signal ground for control interface; SELV
KL 3	4	Ain1 U	Analogue input 1, set value: 0-10 V, Ri = 100 kΩ, parametrisable curve, only usable as alternative to input Ain1; SELV
KL 3	5	+ 10 V	Fixed voltage output 10 VDC, +10 V ±3%, max. 10 mA, short-circuit-proof, power supply for external devices (e.g. potentiometer); SELV
KL 3	6	Ain1 I	Analogue input 1, set value: 4-20 mA; Ri = 100 Ω, parametrisable curve, only usable as alternative to input Ain1 U; SELV
KL 3	7	Din1	Digital input 1: enabling of electronics, enabling: open pin or applied voltage 5-50 VDC disabling: bridge to GND or applied voltage <1 VDC reset function: triggers software reset after a level change to <1 V; SELV
KL 3	8	Din2	Digital input 2: parameter set switch 1/2, according to EEPROM setting, the valid/used parameter set can be selected via bus or via digital input DIN2. Parameter set 1: open pin or applied voltage 5-50 VDC Parameter set 2: bridge to GND or applied voltage <1 VDC; SELV
KL 3	9	Din3	Digital input 3: controller function of integrated controller, according to EEPROM setting, the controller function of the integrated controller is normally/inversely selectable per bus or per digital input normal: open pin or applied voltage 5-50 VDC inverse: bridge to GND or applied voltage <0.8 VDC; SELV
KL 3	11	Ain2 U	Analogue input 2, actual value: 0-10 V, Ri = 100 kΩ, parametrisable curve, only usable as alternative to input Ain2; SELV
KL 3	12	+ 20 V	Fixed voltage output 20 VDC, +20 V +25/-10%, max. 50 mA, short-circuit-proof, power supply for external devices (e.g. sensors); SELV

No.	Conn.	Designation	Function / assignment
KL 3	13	Ain2 I	Analogue input 2, actual value: 4-20 mA, Ri = 100 Ω, parametrisable curve, only usable as alternative to input Ain2 U; SELV
KL 3	14	Aout	Analogue output 0-10 VDC, max. 5 mA, output of the current motor level control coefficient / motor speed parametrisable curve; SELV

S3G800-BS39-10

TRANE SAS

EC axial fan - HyBlade

sickled blades (S series)

with guard grille for full nozzle

Charts: Air flow 50 Hz

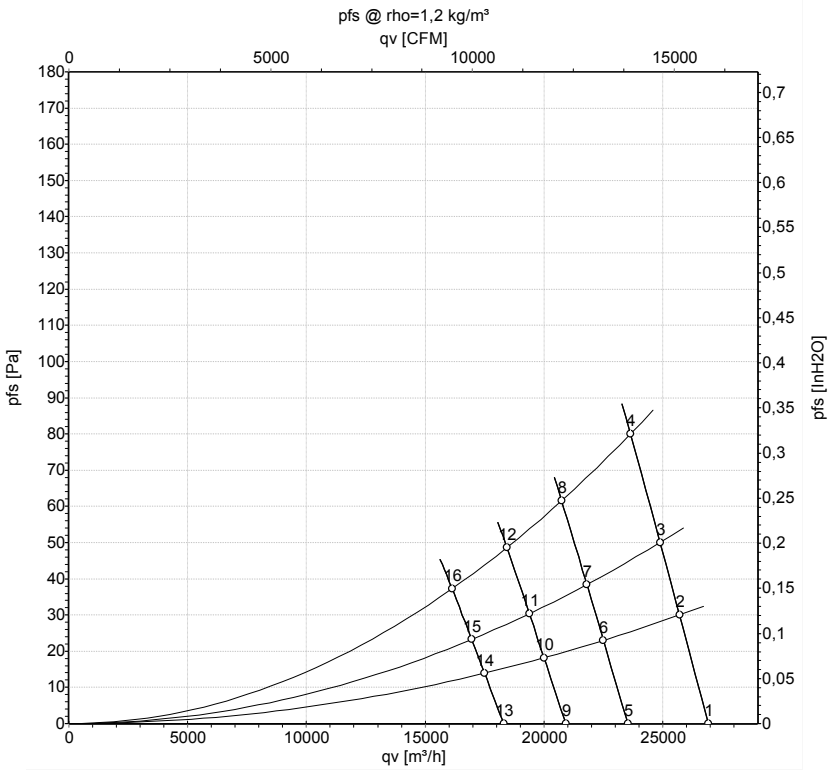

Measurement: LU-163024

Air performance measured as per ISO 5801 Installation category A. For detailed information on the measuring set-up, please contact ebm-papst. Suction-side noise levels: LwA measured as per ISO 13347 / LpA measured with 1m distance to fan axis. The values given are valid under the measuring conditions mentioned above and may vary according to the actual installation situation. With any deviation from the standard set-up, the specific values have to be checked and reviewed with the unit installed.

Measured values

	U	f	n	P_{ed}	I	qv	p_{fs}
	V	Hz	min^{-1}	W	A	m^3/h	Pa
1	400	50	1020	1694	2.64	26935	0
2	400	50	1020	1798	2.79	25710	30
3	400	50	1020	1869	2.90	24890	50
4	400	50	1020	1950	3.00	23645	80
5	400	50	900	1130	1.76	23535	0
6	400	50	900	1206	1.87	22505	23
7	400	50	900	1258	1.95	21810	39
8	400	50	900	1334	2.06	20745	62
9	400	50	800	794	1.24	20920	0
10	400	50	800	847	1.32	20005	18
11	400	50	800	884	1.37	19385	31
12	400	50	800	937	1.45	18440	49
13	400	50	700	532	0.83	18305	0
14	400	50	700	568	0.88	17505	14
15	400	50	700	592	0.92	16965	23
16	400	50	700	628	0.97	16135	37

U = Supply voltage · f = Frequency · n = Speed · P_{ed} = Power input · I = Current draw · qv = Air flow · p_{fs} = Pressure increase