S3G910-CV02-06

EC axial fan - HyBlade

sickle-shaped blades (S series)

with guard grille for full nozzle

ebm-papst Mulfingen GmbH & Co. KG
Bachmühle 2 · D-74673 Mulfingen
Phone +49 7938 81-0
Fax +49 7938 81-110
info1@de.ebmpapst.com
www.ebmpapst.com

Nominal data

Type	**S3G910-CV02-06**
Motor	**M3G150-NA**

Phase		3~
Nominal voltage	VAC	400
Nominal voltage range	VAC	380 .. 480
Frequency	Hz	50/60
Method of obtaining data		ml
Speed (rpm)	min^{-1}	1100
Power consumption	W	3150
Current draw	A	4.85
Max. back pressure	Pa	170
Max. back pressure	inH2O	0.68
Min. ambient temperature	°C	-25
Max. ambient temperature	°C	60

ml = Max. load · me = Max. efficiency · fa = Free air · cs = Customer specification · ce = Customer equipment
Subject to change

Data according to Commission Regulation (EU) 327/2011

		Actual	Req. 2015
01 Overall efficiency η_{es}	%	45.4	36.9
02 Measurement category		A	
03 Efficiency category		Static	
04 Efficiency grade N		48.5	40
05 Variable speed drive		Yes	

09 Power consumption P_{ed}	kW	3.24
09 Air flow q_v	m³/h	22995
09 Pressure increase p_{fs}	Pa	219
10 Speed (rpm) n	min^{-1}	1045
11 Specific ratio*		1.00

Data obtained at optimum efficiency level.
The ErP data is determined using a motor-impeller combination in a standardized measurement setup.

* Specific ratio = 1 + p_{fs} / 100 000 Pa

LU-122761

EC axial fan - HyBlade

sickle-shaped blades (S series)

with guard grille for full nozzle

Technical description

Weight	40.5 kg
Fan size	910 mm
Rotor surface	Painted black
Electronics housing material	Die-cast aluminum, painted black
Blade material	Sheet aluminum insert, sprayed with PP plastic
Guard grille material	Steel, coated with black plastic (RAL 9005)
Number of blades	5
Blade pitch	0°
Airflow direction	"V"
Direction of rotation	Clockwise, viewed toward rotor
Degree of protection	IP55
Insulation class	"F"
Moisture (F) / Environmental (H) protection class	F4-1
Max. permitted ambient temp. for motor (transport/storage)	+ 80 °C
Min. permitted ambient temp. for motor (transport/storage)	- 40 °C
Installation position	Shaft horizontal or rotor on bottom
Condensation drainage holes	On rotor side
Mode	S1
Motor bearing	Ball bearing
Technical features	- Output 10 VDC, max. 10 mA - Output 20 VDC, max. 50 mA - Output for slave 0-10 V - Operation and alarm display - Input for sensor 0-10 V or 4-20 mA - External 24 V input (parameter setting) - External release input - Alarm relay - Integrated PID controller - Motor current limitation - PFC, passive - RS-485 MODBUS-RTU - Soft start - Control input 0-10 VDC / PWM - Control interface with SELV potential safely disconnected from supply - Thermal overload protection for electronics/motor - Line undervoltage / phase failure detection
EMC immunity to interference	According to EN 61000-6-2 (industrial environment)
EMC interference emission	According to EN 61000-6-3 (household environment)
Touch current according to IEC 60990 (measuring circuit Fig. 4, TN system)	<= 3.5 mA
Electrical hookup	Via terminal box
Motor protection	Reverse polarity and locked-rotor protection
Protection class	I (with customer connection of protective earth)
Conformity with standards	EN 61800-5-1; CE
Approval	UL 1004-7 + 60730; EAC; C22.2 No.77 + CAN/CSA-E60730-1

ebmpapst

EC axial fan - HyBlade

sickle-shaped blades (S series)

with guard grille for full nozzle

Product drawing

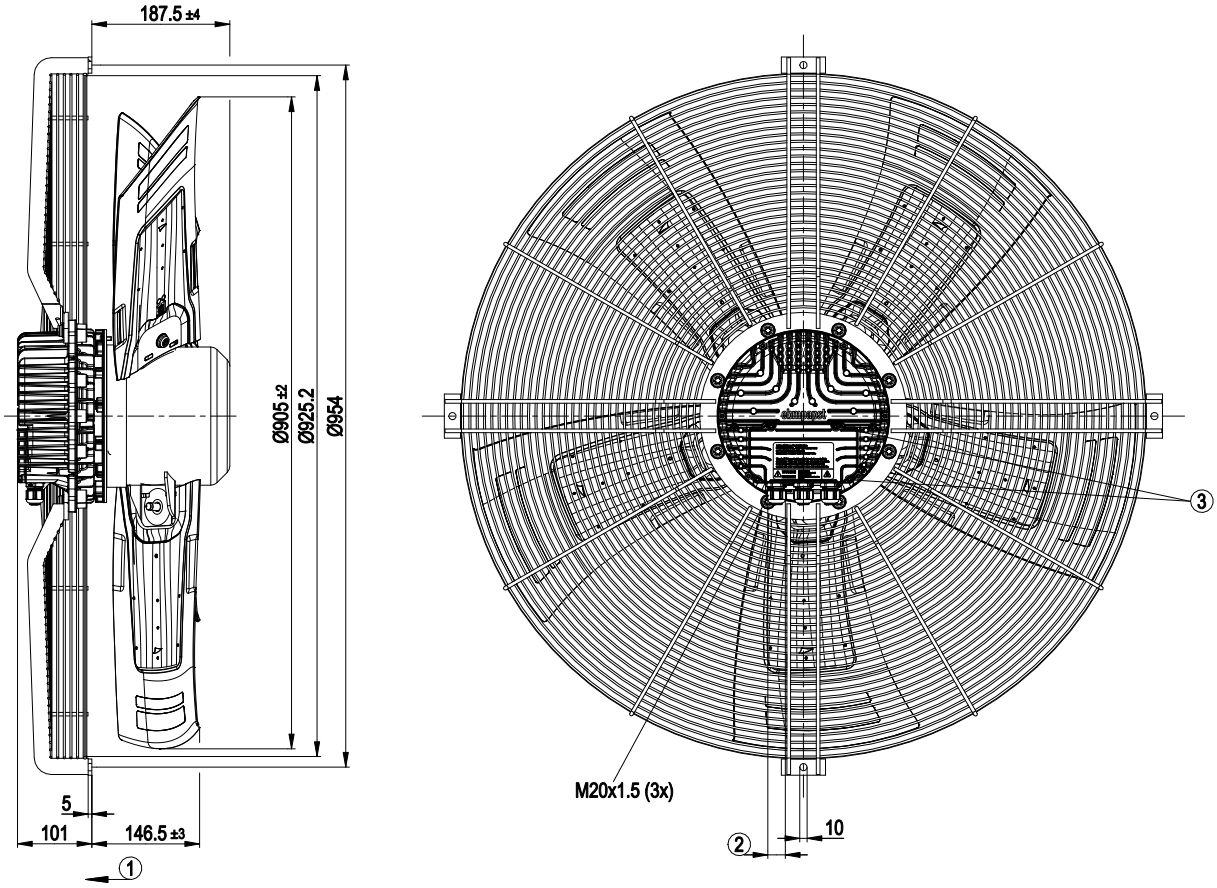

1	Direction of air flow "V"
2	Cable diameter min. 4 mm; max. 10 mm; tightening torque 4±0.6 Nm
3	Tightening torque 3.5±0.5 Nm

EC axial fan - HyBlade

sickle-shaped blades (S series)

with guard grille for full nozzle

Connection diagram

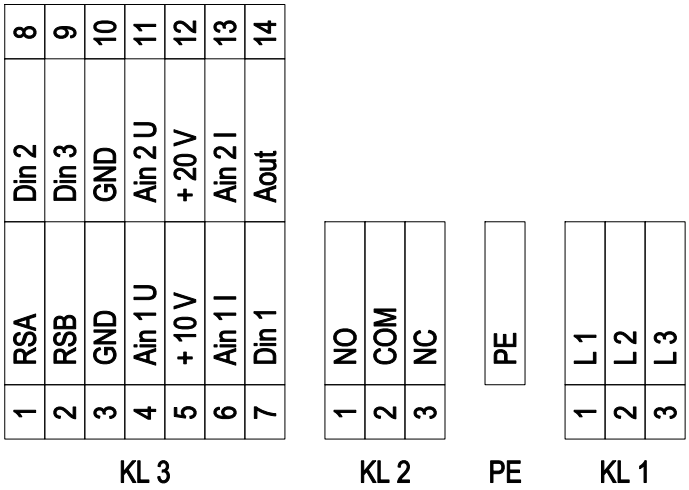

No.	Conn.	Designation	Function/assignment
KL 1	1	L1	Supply connection, power supply 3-phase 380-480 VAC, 50/60 Hz
KL 1	2	L2	Supply connection, power supply 3-phase 380-480 VAC, 50/60 Hz
KL 1	3	L3	Supply connection, power supply 3-phase 380-480 VAC, 50/60 Hz
PE		PE	Ground connection, PE connection
KL 2	1	NO	Status relay, floating status contact; make for failure
KL2	2	COM	Status relay, floating status contact; changeover contact; common connection; contact rating 250 VAC / max. 2 A (AC1) / min. 10 mA
KL2	3	NC	Status relay, floating status contact; break for failure
KL 3	1	RSA	Bus connection RS485, RSA, MODBUS-RTU; SELV
KL 3	2	RSB	Bus connection RS485, RSB, MODBUS-RTU; SELV
KL 3	3 / 10	GND	Reference ground for control interface; SELV
KL 3	4	Ain1 U	Analog input 1, set value: 0-10 V, Ri = 100 kΩ, adjustable curve, only usable as alternative to input Ain1 I; SELV
KL 3	5	+ 10 V	Fixed voltage output 10 VDC, +10 V ±3%, max. 10 mA, short-circuit-proof power supply for external devices (e.g. pot); SELV
KL 3	6	Ain1 I	Analog input 1, set value: 4-20 mA, Ri = 100 Ω, adjustable curve, only usable as alternative to input Ain1U; SELV
KL 3	7	Din1	Digital input 1: enable electronics, enable: pin open or applied voltage 5-50 VDC disable: bridge to GND or applied voltage < 1 VDC reset function: triggers software reset after a level change to < 1 VDC; SELV
KL 3	8	Din2	Digital input 2: Switching parameter sets 1/2, according to EEPROM setting, the valid or used parameter set can be selected via bus or via digital input DIN2. Parameter set 1: pin open or applied voltage 5-50 VDC Parameter set 2: bridge to GND or applied voltage < 1 VDC; SELV
KL 3	9	Din3	Digital input 3: according to EEPROM setting, the integrated controller's direction of action can be selected as normal/inverse via bus or digital input normal: pin open or applied voltage 5-50 VDC inverse: bridge to GND or applied voltage < 1 VDC; SELV
KL 3	11	Ain2 U	Analog input 2, measured value: 0-10 V, Ri = 100 kΩ, adjustable curve, only usable as alternative to input Ain2I; SELV
KL 3	12	+ 20 V	Fixed voltage output 20 VDC, +20 V +25/-10%, max. 50 mA, short-circuit-proof power supply for external devices (e.g. sensors); SELV

ebmpapst

No.	Conn.	Designation	Function/assignment
KL 3	13	Ain2 I	Analog input 2, measured value: 4-20 mA, Ri = 100 Ω, adjustable curve, only usable as alternative to input Ain2U; SELV
KL 3	14	Aout	Analog output 0-10 VDC, max. 5 mA, output of current motor modulation level / motor speed adjustable curve; SELV

S3G910-CV02-06

EC axial fan - HyBlade

sickle-shaped blades (S series)

with guard grille for full nozzle

Curves: Air performance 50 Hz

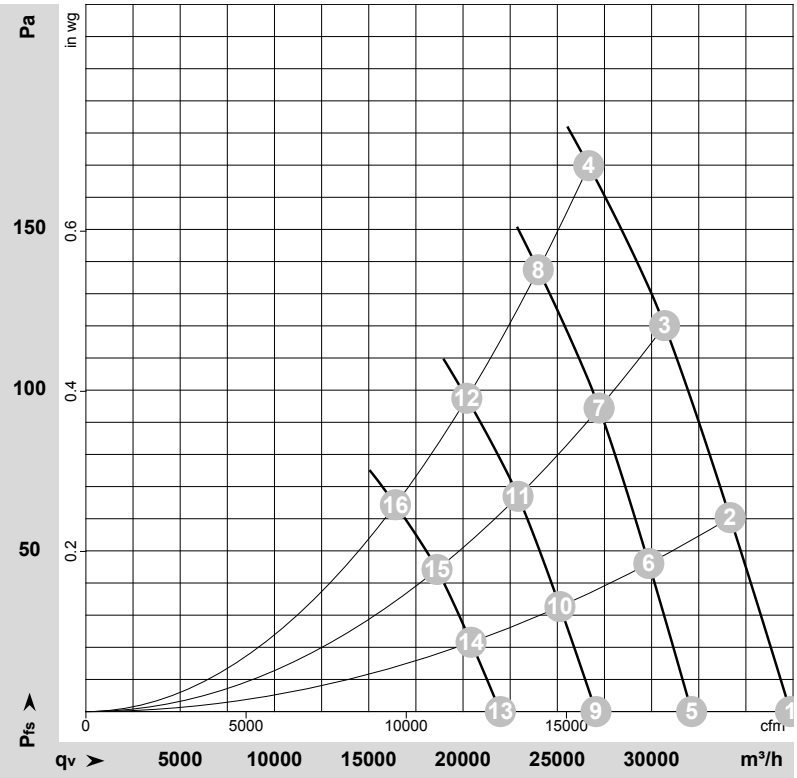

ρ = 1.15 kg/m³ ± 2 %

Measurement: LU-167499-1

Air performance measured according to ISO 5801 installation category A. For detailed information on the measurement setup, contact ebm-papst. Intake sound level: Sound power level according to ISO 13347 / sound pressure level measured at 1 m distance from fan axis. The values given are valid under the specified measuring conditions and may vary due to conditions of installation. For deviations from the standard configuration, the parameters have to be checked on the installed unit.

Measured values

	U	f	n	P_{ed}	I	LpA_{in}	LwA_{in}	LwA_{out}	q_V	p_{fs}	q_V	p_{fs}
	V	Hz	min^{-1}	W	A	dB(A)	dB(A)	dB(A)	m^3/h	Pa	cfm	inH2O
1	400	50	1100	2650	4.06	76	84	86	37365	0	21990	0.00
2	400	50	1090	2846	4.35	75	82	85	34165	60	20110	0.24
3	400	50	1070	3028	4.62	74	82	84	30685	120	18060	0.48
4	400	50	1055	3150	4.85	75	82	84	26665	170	15695	0.68
5	400	50	950	1684	2.58	73	80	82	32125	0	18905	0.00
6	400	50	950	1897	2.90	72	79	81	29850	47	17570	0.19
7	400	50	950	2112	3.23	71	79	81	27215	95	16020	0.38
8	400	50	950	2310	3.53	72	80	82	23990	138	14120	0.55
9	400	50	800	1006	1.54	68	76	78	27050	0	15920	0.00
10	400	50	800	1133	1.73	68	75	77	25140	33	14795	0.13
11	400	50	800	1261	1.93	67	74	76	22915	68	13490	0.27
12	400	50	800	1379	2.11	68	75	77	20200	98	11890	0.39
13	400	50	650	539	0.83	63	70	73	21980	0	12935	0.00
14	400	50	650	608	0.93	62	69	72	20425	22	12020	0.09
15	400	50	650	677	1.03	62	69	71	18620	45	10960	0.18
16	400	50	650	740	1.13	63	70	72	16415	64	9660	0.26

U = Power supply · f = Frequency · n = Speed (rpm) · P_{ed} = Power consumption · I = Current draw · LpA_{in} = Sound pressure level intake side · LwA_{in} = Sound power level intake side
LwA_{out} = Sound power level outlet side · q_V = Air flow · p_{fs} = Pressure increase

ebmpapst