S4D350-BN08-38

AC axial fan

sickle-shaped blades (S series)

with guard grille for full nozzle

ebm-papst Mulfingen GmbH & Co. KG
Bachmühle 2 · D-74673 Mulfingen
Phone +49 7938 81-0
Fax +49 7938 81-110
info1@de.ebmpapst.com
www.ebmpapst.com

Limited partnership · Headquarters Mulfingen
Amtsgericht (court of registration) Stuttgart · HRA 590344

General partner Elektrobau Mulfingen GmbH · Headquarters Mulfingen
Amtsgericht (court of registration) Stuttgart · HRB 590142

Nominal data

Type	**S4D350-BN08-38**
Motor	**M4D074-DF**

Phase		3~	3~	3~
Nominal voltage	VAC	400	400	460
Wiring		Y	Y	Y
Frequency	Hz	50	60	60
Method of obtaining data		ml	ml	ml
Valid for approval/standard		-	-	-
Speed (rpm)	min^{-1}	1370	1520	1600
Power consumption	W	170	230	255
Current draw	A	0.37	0.40	0.42
Max. back pressure	Pa	90	90	110
Max. back pressure	in. wg	0.36	0.36	0.44
Min. ambient temperature	°C	-25	-25	-25
Max. ambient temperature	°C	65	55	55
Starting current	A	1.1	1.1	1.22

ml = Max. load · me = Max. efficiency · fa = Free air · cs = Customer specification · ce = Customer equipment
Subject to change

Data according to Commission Regulation (EU) 327/2011

		Actual	Req. 2015
01 Overall efficiency η_{es}	%	28.7	28.6
02 Measurement category		A	
03 Efficiency category		Static	
04 Efficiency grade N		40.1	40
05 Variable speed drive		No	

09 Power consumption P_e	kW	0.16
09 Air flow q_v	m³/h	2105
09 Pressure increase p_{fs}	Pa	82
10 Speed (rpm) n	min^{-1}	1375
11 Specific ratio*		1.00

Data obtained at optimum efficiency level.
The ErP data is determined using a motor-impeller combination in a standardized measurement setup.

* Specific ratio = 1 + p_{fs} / 100 000 Pa

LU-131044

S4D350-BN08-38

AC axial fan

sickle-shaped blades (S series)

with guard grille for full nozzle

Technical description

Weight	4.4 kg
Size	350 mm
Motor size	74
Rotor surface	Painted black
Blade material	PP plastic
Guard grille material	Steel, coated with black plastic (RAL 9005)
Number of blades	5
Airflow direction	V
Direction of rotation	Counterclockwise, viewed toward rotor
Degree of protection	IP44; installation- and position-dependent as per EN 60034-5
Insulation class	"F"
Moisture (F) / Environmental (H) protection class	H1+; F2-2
Max. permitted ambient temp. for motor (transport/storage)	+ 80 °C
Min. permitted ambient temp. for motor (transport/storage)	- 40 °C
Installation position	Shaft horizontal or rotor on bottom; rotor on top on request
Condensation drainage holes	On rotor side
Mode	S1
Motor bearing	Ball bearing
Touch current according to IEC 60990 (measuring circuit Fig. 4, TN system)	< 0.75 mA
Motor protection	Thermal overload protector (TOP) internally connected
With cable	Variable
Protection class	I (with customer connection of protective earth)
Conformity with standards	EN 60335-1; CE
Approval	UL 1004-1; CSA C22.2 No. 100

ebm-papst Mulfingen GmbH & Co. KG · Bachmühle 2 · D-74673 Mulfingen · Phone +49 (0) 7938 81-0 · Fax +49 (0) 7938 81-110 · info1@de.ebmpapst.com · www.ebmpapst.com

AC axial fan

sickle-shaped blades (S series)

with guard grille for full nozzle

Product drawing

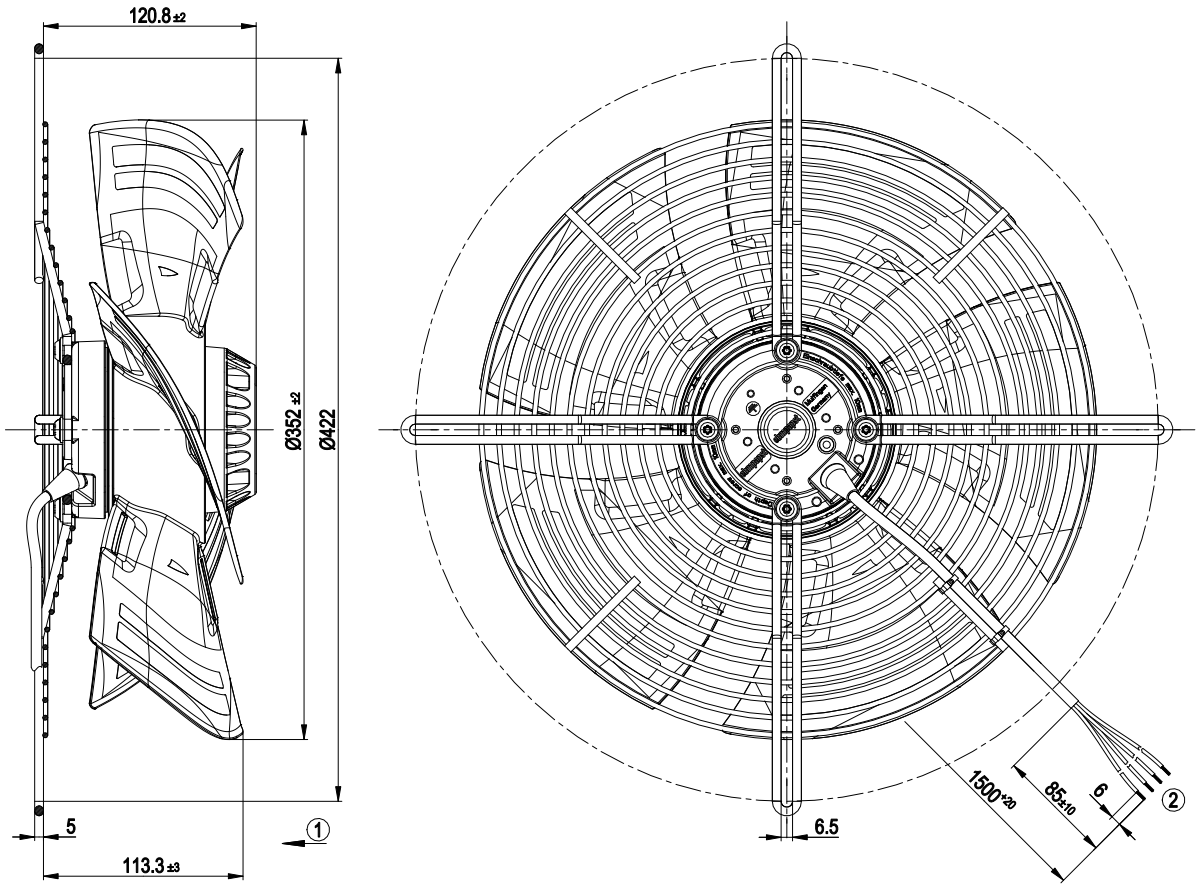

1	Direction of air flow "V"
2	Cable PFA AWG18, 4x crimped splices

ebm-papst Mulfingen GmbH & Co. KG · Bachmühle 2 · D-74673 Mulfingen · Phone +49 (0) 7938 81-0 · Fax +49 (0) 7938 81-110 · info1@de.ebmpapst.com · www.ebmpapst.com

AC axial fan

sickle-shaped blades (S series)

with guard grille for full nozzle

Connection diagram

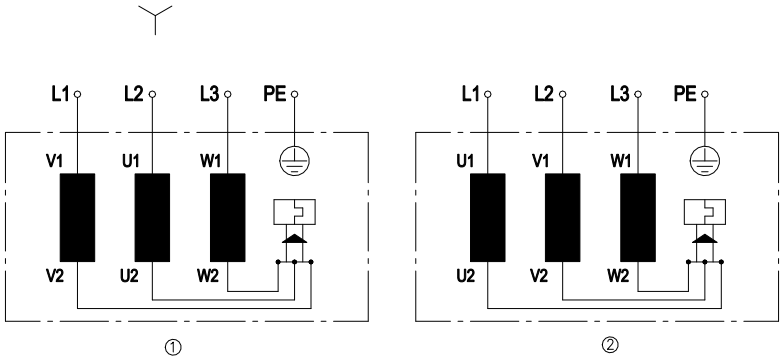

Change of rotation direction by reversing two phases

	Three-phase motor
Y	Star connection
1	Counterclockwise operation
L1	= V1 = blue
L2	= U1 = black
L3	= W1 = brown
2	Clockwise operation
L1	=U1=black
L2	=V1=blue
L3	=W1=brown
PE	green/yellow

ebm-papst Mulfingen GmbH & Co. KG · Bachmühle 2 · D-74673 Mulfingen · Phone +49 (0) 7938 81-0 · Fax +49 (0) 7938 81-110 · info1@de.ebmpapst.com · www.ebmpapst.com

S4D350-BN08-38

AC axial fan

sickle-shaped blades (S series)

with guard grille for full nozzle

Curves: Air performance 50 Hz

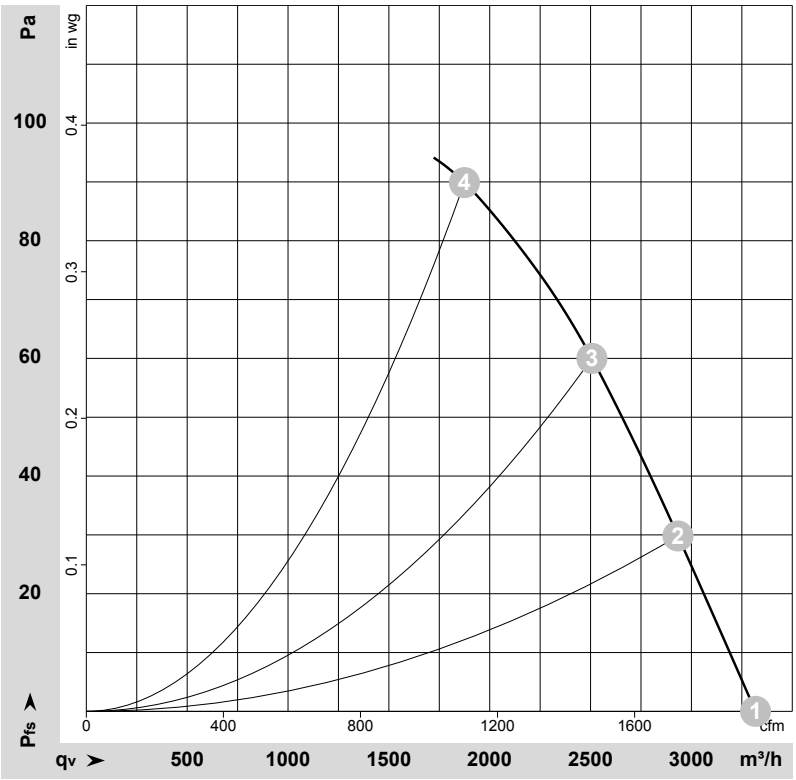

ρ = 1.15 kg/m³ ± 2 %

Measurement: LU-131044-1

Air performance measured according to ISO 5801 installation category A. For detailed information on the measurement setup, contact ebm-papst. Intake sound level: Sound power level according to ISO 13347 / sound pressure level measured at 1 m distance from fan axis. The values given are valid under the specified measuring conditions and may vary due to conditions of installation. For deviations from the standard configuration, the parameters have to be checked on the installed unit.

Measured values

	Wired	U	f	n	P_e	I	LpA_{in}	LwA_{in}	q_V	p_{fs}	q_V	p_{fs}
		V	Hz	min^{-1}	W	A	dB(A)	dB(A)	m^3/h	Pa	cfm	in. wg
1	Y	400	50	1405	136	0.34	61	69	3320	0	1955	0.00
2	Y	400	50	1395	148	0.35	59	66	2935	30	1725	0.12
3	Y	400	50	1380	158	0.35	56	64	2505	60	1475	0.24
4	Y	400	50	1370	170	0.37	56	64	1875	90	1105	0.36

Wired = Wiring · U = Voltage · f = Frequency · n = Speed (rpm) · P_e = Power consumption · I = Current draw · LpA_{in} = Sound pressure level intake side · LwA_{in} = Sound power level intake side
q_V = Air flow · p_{fs} = Pressure increase

ebm-papst Mulfingen GmbH & Co. KG · Bachmühle 2 · D-74673 Mulfingen · Phone +49 (0) 7938 81-0 · Fax +49 (0) 7938 81-110 · info1@de.ebmpapst.com · www.ebmpapst.com

S4D350-BN08-38

AC axial fan

sickle-shaped blades (S series)

with guard grille for full nozzle

Curves: Air performance 60 Hz

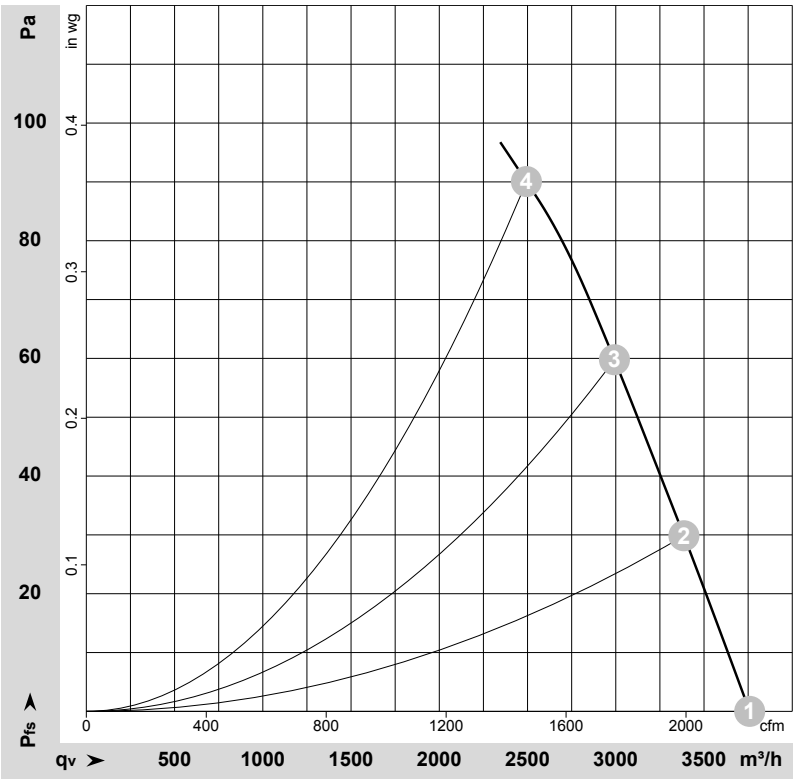

ρ = 1.15 kg/m³ ± 2 %

Measurement: LU-131047-1

Air performance measured according to ISO 5801 installation category A. For detailed information on the measurement setup, contact ebm-papst. Intake sound level: Sound power level according to ISO 13347 / sound pressure level measured at 1 m distance from fan axis. The values given are valid under the specified measuring conditions and may vary due to conditions of installation. For deviations from the standard configuration, the parameters have to be checked on the installed unit.

Measured values

	Wired	U	f	n	P_e	I	LpA_{in}	LwA_{in}	q_V	p_{fs}	q_V	p_{fs}
		V	Hz	min^{-1}	W	A	dB(A)	dB(A)	m^3/h	Pa	cfm	in. wg
1	Y	400	60	1595	184	0.33	64	72	3760	0	2210	0.00
2	Y	400	60	1575	200	0.35	62	69	3385	30	1995	0.12
3	Y	400	60	1550	215	0.37	60	67	2995	60	1760	0.24
4	Y	400	60	1520	230	0.40	58	66	2495	90	1470	0.36

Wired = Wiring · U = Voltage · f = Frequency · n = Speed (rpm) · P_e = Power consumption · I = Current draw · LpA_{in} = Sound pressure level intake side · LwA_{in} = Sound power level intake side
q_V = Air flow · p_{fs} = Pressure increase

ebm-papst Mulfingen GmbH & Co. KG · Bachmühle 2 · D-74673 Mulfingen · Phone +49 (0) 7938 81-0 · Fax +49 (0) 7938 81-110 · info1@de.ebmpapst.com · www.ebmpapst.com