S4D560-AB01-01

AC axial fan

sickle-shaped blades (S series)

with guard grille for short nozzle

Nominal data

Type	**S4D560-AB01-01**
Motor	**M4D110-IA**

Phase		3~	3~
Nominal voltage	VAC	400	400
Wiring		Δ	Y
Frequency	Hz	50	50
Method of obtaining data		ml	ml
Valid for approval/standard		CE	CE
Speed (rpm)	min^{-1}	1355	1080
Power consumption	W	1170	800
Current draw	A	2.53	1.45
Max. back pressure	Pa	170	113
Max. back pressure	inH2O	0.68	0.45
Min. ambient temperature	°C	-40	-40
Max. ambient temperature	°C	60	60
Starting current	A	10	3.1

ml = Max. load · me = Max. efficiency · fa = Free air · cs = Customer specification · ce = Customer equipment
Subject to change

Data according to ErP Directive

		Actual	Req. 2015
01 Overall efficiency η_{es}	%	34.9	34.1
02 Measurement category		A	
03 Efficiency category		Static	
04 Efficiency grade N		40.8	40
05 Variable speed drive		No	

09 Power consumption P_e	kW	1.19
09 Air flow q_v	m³/h	7995
09 Pressure increase p_{fs}	Pa	189
10 Speed (rpm) n	min^{-1}	1350
11 Specific ratio*		1.00

Data obtained at optimum efficiency level.
The ErP data is determined using a motor-impeller combination in a standardized measurement setup.

* Specific ratio = 1 + p_{fs} / 100 000 Pa

LU-70523

AC axial fan

sickle-shaped blades (S series)

with guard grille for short nozzle

Technical description

Weight	16.2 kg
Fan size	560 mm
Rotor surface	Cast in aluminum
Terminal box material	PP plastic
Blade material	Sheet aluminum
Guard grille material	Steel, coated with black plastic (RAL 9005)
Number of blades	5
Blade pitch	-5
Airflow direction	"V"
Direction of rotation	Counterclockwise, viewed toward rotor
Degree of protection	IP54
Insulation class	"F"
Moisture (F) / Environmental (H) protection class	F3-1
Max. permitted ambient temp. for motor (transport/storage)	+ 80 °C
Min. permitted ambient temp. for motor (transport/storage)	- 40 °C
Installation position	Shaft horizontal or rotor on bottom; rotor on top on request
Condensation drainage holes	On rotor side
Mode	S1
Motor bearing	Ball bearing
Touch current according to IEC 60990 (measuring circuit Fig. 4, TN system)	<= 3.5 mA
Electrical hookup	Via terminal box
Motor protection	Thermal overload protector (TOP) with basic insulation
With cable	Axial
Protection class	I (with customer connection of protective earth)
Conformity with standards	EN 61800-5-1; CE
Approval	CCC; EAC; VDE

ebmpapst

AC axial fan

sickle-shaped blades (S series)

with guard grille for short nozzle

Product drawing

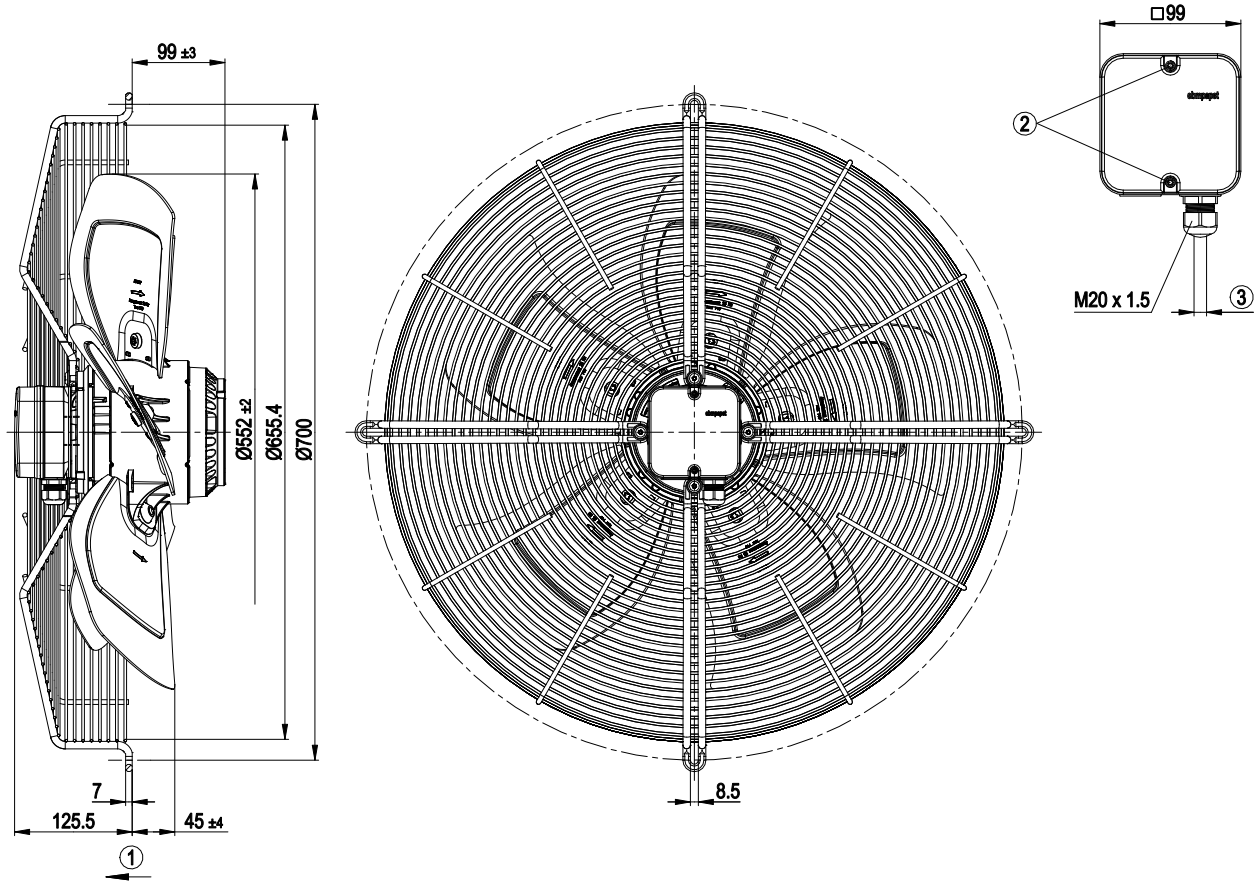

1	Direction of air flow "V"
2	Tightening torque 1.5 ± 0.2 Nm
3	Cable diameter: min. 6 mm, max. 12 mm; tightening torque 2±0.3 Nm

AC axial fan

sickle-shaped blades (S series)

with guard grille for short nozzle

Connection diagram

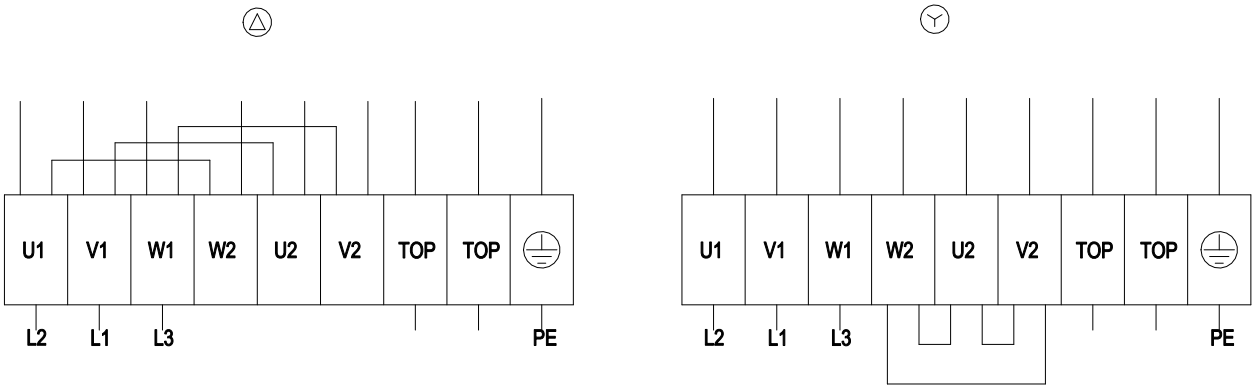

Δ	Delta connection	Y	Star connection	L1	= V1 = blue
L2	= U1 = black	L3	= W1 = brown	W2	yellow
U2	green	V2	white	TOP	2x gray
PE	green/yellow				

S4D560-AB01-01

AC axial fan

sickle-shaped blades (S series)

with guard grille for short nozzle

Curves: Air performance 50 Hz

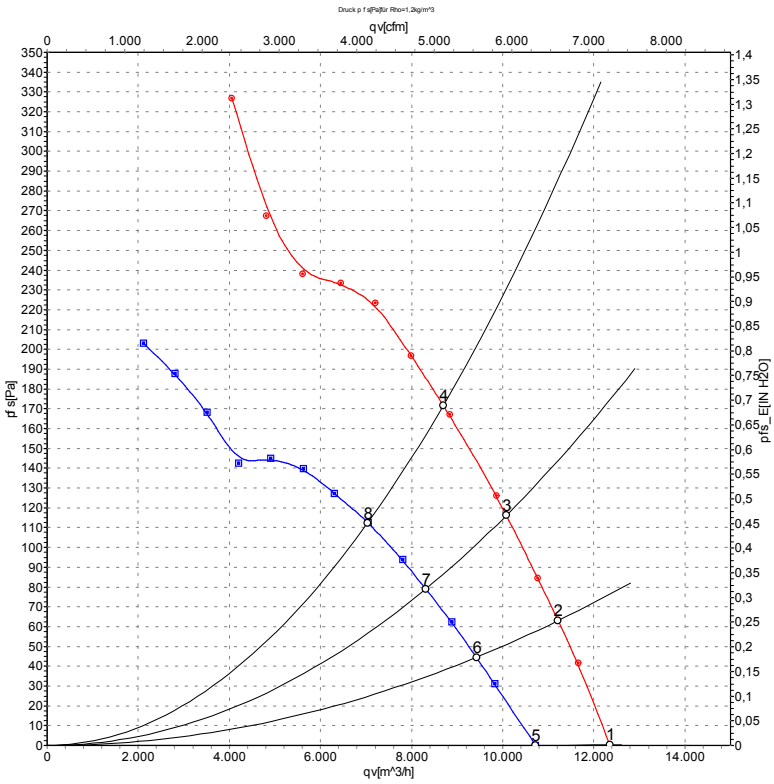

Measurement: LU-70523-1
Measurement: LU-70524-1

Air performance measured according to ISO 5801 installation category A. For detailed information on the measurement setup, contact ebm-papst. Intake sound level: Sound power level according to ISO 13347 / sound pressure level measured at 1 m distance from fan axis. The values given are valid under the specified measuring conditions and may vary due to conditions of installation. For deviations from the standard configuration, the parameters have to be checked on the installed unit.

Measured values

	Wired	U	f	n	P_e	I	LwA_{in}	qv	p_{fs}	qv	p_{fs}
		V	Hz	min^{-1}	W	A	dB(A)	m^3/h	Pa	CFM	inH2O
1	Δ	400	50	1400	879	2.19	80	12350	0	7270	0.00
2	Δ	400	50	1380	987	2.33	80	11220	63	6605	0.25
3	Δ	400	50	1370	1068	2.45	80	10080	115	5935	0.46
4	Δ	400	50	1355	1170	2.53	81	8695	170	5120	0.68
5	Y	400	50	1195	663	1.18	77	10720	0	6310	0.00
6	Y	400	50	1155	720	1.28	77	9420	44	5545	0.18
7	Y	400	50	1125	760	1.36	76	8310	79	4890	0.32
8	Y	400	50	1080	800	1.45	77	7040	113	4140	0.45

Wired = Wiring · U = Power supply · f = Frequency · n = Speed (rpm) · P_e = Power consumption · I = Current draw · LwA_{in} = Sound power level intake side · qv = Air flow · p_{fs} = Pressure increase

ebmpapst