**S4D630-AH01-01**

# AC axial fan - HyBlade

sickle-shaped blades (S series)

with guard grille for short nozzle

**ebm-papst Mulfingen GmbH & Co. KG**
Bachmühle 2 · D-74673 Mulfingen
Phone +49 7938 81-0
Fax +49 7938 81-110
info1@de.ebmpapst.com
www.ebmpapst.com

Limited partnership · Headquarters Mulfingen
Amtsgericht (court of registration) Stuttgart · HRA 590344

General partner Elektrobau Mulfingen GmbH · Headquarters Mulfingen
Amtsgericht (court of registration) Stuttgart · HRB 590142

## Nominal data

| | |
|---|---|
| **Type** | **S4D630-AH01-01** |
| **Motor** | **M4D138-HF** |

| | | | |
|---|---|---|---|
| Phase | | 3~ | 3~ |
| Nominal voltage | VAC | 400 | 400 |
| Wiring | | Δ | Y |
| Frequency | Hz | 50 | 50 |
| Method of obtaining data | | ml | ml |
| Valid for approval/standard | | - | - |
| Speed (rpm) | $min^{-1}$ | 1310 | 1000 |
| Power consumption | W | 1970 | 1290 |
| Current draw | A | 3.4 | 2.1 |
| Max. back pressure | Pa | 200 | 115 |
| Max. back pressure | in. wg | 0.8 | 0.46 |
| Min. ambient temperature | °C | -40 | -40 |
| Max. ambient temperature | °C | 60 | 60 |
| Starting current | A | 14 | 4.5 |

ml = Max. load · me = Max. efficiency · fa = Free air · cs = Customer specification · ce = Customer equipment
Subject to change

# AC axial fan - HyBlade

sickle-shaped blades (S series)

with guard grille for short nozzle

## Technical description

| | |
|---|---|
| **Weight** | 25.7 kg |
| **Size** | 630 mm |
| **Motor size** | 138 |
| **Rotor surface** | Cast in aluminum |
| **Terminal box material** | PP plastic |
| **Blade material** | Sheet aluminum insert, sprayed with PP plastic |
| **Guard grille material** | Steel, coated with black plastic (RAL 9005) |
| **Number of blades** | 5 |
| **Blade pitch** | -5° |
| **Airflow direction** | V |
| **Direction of rotation** | Clockwise, viewed toward rotor |
| **Degree of protection** | IP54 |
| **Insulation class** | "F" |
| **Moisture (F) / Environmental (H) protection class** | H2 |
| **Ambient temperature note** | Occasional start-up at temperatures between -40°C and -25°C is permitted. For continuous operation at ambient temperatures below -25°C (such as refrigeration applications), use must be made of a fan design with special low-temperature bearings. |
| **Max. permitted ambient temp. for motor (transport/storage)** | +80 °C |
| **Min. permitted ambient temp. for motor (transport/storage)** | -40 °C |
| **Installation position** | Any |
| **Condensation drainage holes** | On rotor and stator sides |
| **Mode** | S1 |
| **Motor bearing** | Ball bearing |
| **Touch current according to IEC 60990 (measuring circuit Fig. 4, TN system)** | <= 3.5 mA |
| **Electrical hookup** | Terminal box |
| **Motor protection** | Thermal overload protector (TOP) with basic insulation |
| **With cable** | Axial |
| **Protection class** | I (with customer connection of protective earth) |
| **Conformity with standards** | EN 60034-1 (2010) |
| **Comment on CE** | Commissioning not permitted in the European Economic Area |
| **Approval** | VDE; EAC |



ebm-papst Mulfingen GmbH & Co. KG · Bachmühle 2 · D-74673 Mulfingen · Phone +49 (0) 7938 81-0 · Fax +49 (0) 7938 81-110 · info1@de.ebmpapst.com · www.ebmpapst.com

# AC axial fan - HyBlade

sickle-shaped blades (S series)

with guard grille for short nozzle

## Product drawing

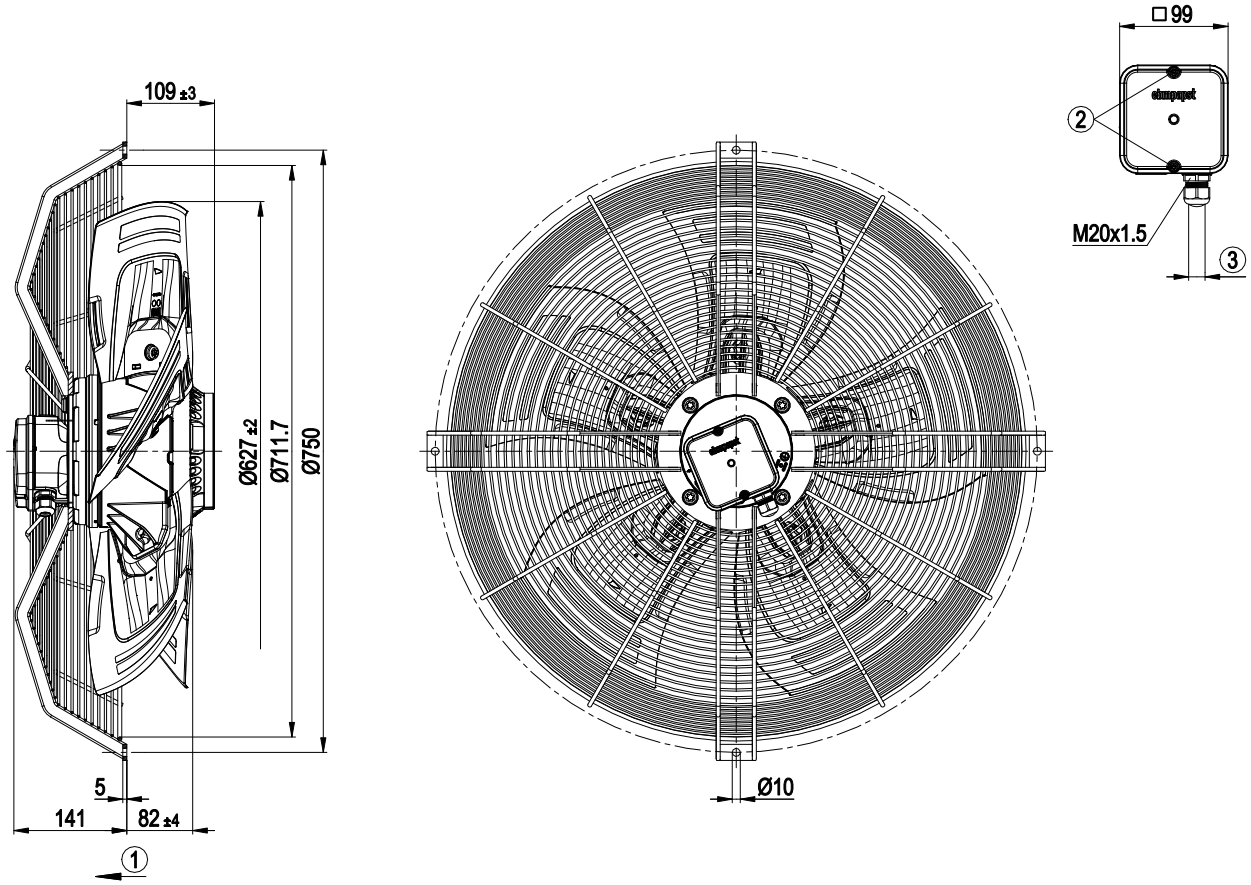


| | |
|---|---|
| 1 | Direction of air flow "V" |
| 2 | Tightening torque 1.5 ± 0.2 Nm |
| 3 | Cable diameter min. 7 mm, max. 14 mm, tightening torque 2 ± 0.3 Nm |



ebm-papst Mulfingen GmbH & Co. KG · Bachmühle 2 · D-74673 Mulfingen · Phone +49 (0) 7938 81-0 · Fax +49 (0) 7938 81-110 · info1@de.ebmpapst.com · www.ebmpapst.com

# AC axial fan - HyBlade

sickle-shaped blades (S series)

with guard grille for short nozzle

## Connection diagram

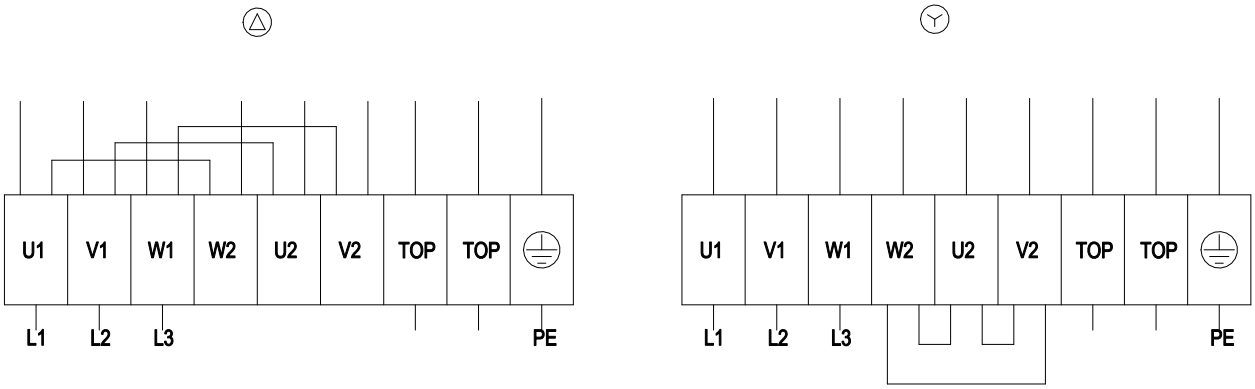


| | | | | | |
|---|---|---|---|---|---|
| Δ | Delta connection | Y | Star connection | L1 | = U1 = black |
| L2 | = V1 = blue | L3 | = W1 = brown | W2 | yellow |
| U2 | green | V2 | white | TOP | 2x gray |
| PE | green/yellow | | | | |



ebm-papst Mulfingen GmbH & Co. KG · Bachmühle 2 · D-74673 Mulfingen · Phone +49 (0) 7938 81-0 · Fax +49 (0) 7938 81-110 · info1@de.ebmpapst.com · www.ebmpapst.com

**S4D630-AH01-01**

# AC axial fan - HyBlade

sickle-shaped blades (S series)

with guard grille for short nozzle

## Curves: Air performance 50 Hz

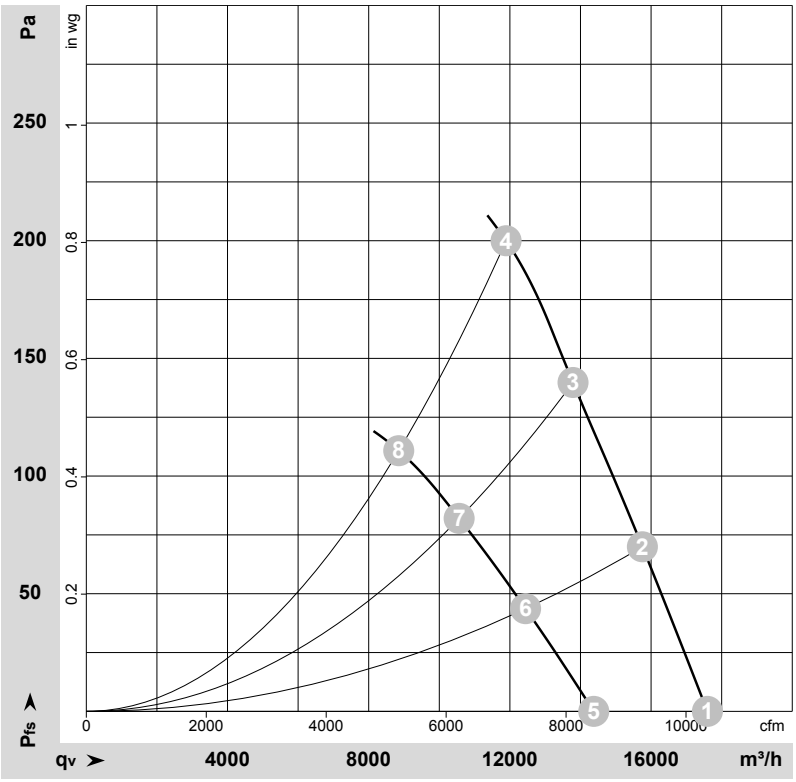


ρ = 1.15 kg/m³ ± 2 %

Measurement: LU-134384-1
Measurement: LU-109489-1

Air performance measured according to ISO 5801 installation category A. For detailed information on the measurement setup, contact ebm-papst. Intake sound level: Sound power level according to ISO 13347 / sound pressure level measured at 1 m distance from fan axis. The values given are valid under the specified measuring conditions and may vary due to conditions of installation. For deviations from the standard configuration, the parameters have to be checked on the installed unit.

## Measured values

| | Wired | U | f | n | $P_e$ | I | $LpA_{in}$ | $LwA_{in}$ | $LwA_{out}$ | $q_V$ | $p_{fs}$ | $q_V$ | $p_{fs}$ |
|---|---|---|---|---|---|---|---|---|---|---|---|---|---|
| | | V | Hz | $min^{-1}$ | W | A | dB(A) | dB(A) | dB(A) | $m^3/h$ | Pa | cfm | in. wg |
| 1 | Δ | 400 | 50 | 1380 | 1483 | 2.83 | 70 | 77 | 77 | 17595 | 0 | 10355 | 0.00 |
| 2 | Δ | 400 | 50 | 1360 | 1676 | 3.07 | 69 | 76 | 76 | 15755 | 70 | 9270 | 0.28 |
| 3 | Δ | 400 | 50 | 1335 | 1854 | 3.33 | 69 | 75 | 75 | 13790 | 140 | 8115 | 0.56 |
| 4 | Δ | 400 | 50 | 1310 | 1970 | 3.40 | 71 | 78 | 77 | 11890 | 200 | 7000 | 0.80 |
| 5 | Y | 400 | 50 | 1125 | 1079 | 1.80 | 65 | 72 | 72 | 14375 | 0 | 8460 | 0.00 |
| 6 | Y | 400 | 50 | 1075 | 1175 | 1.96 | 63 | 70 | 70 | 12445 | 44 | 7325 | 0.18 |
| 7 | Y | 400 | 50 | 1035 | 1237 | 2.08 | 62 | 68 | 69 | 10560 | 82 | 6215 | 0.33 |
| 8 | Y | 400 | 50 | 1000 | 1290 | 2.10 | 63 | 70 | 70 | 8850 | 111 | 5210 | 0.45 |

Wired = Wiring · U = Voltage · f = Frequency · n = Speed (rpm) · $P_e$ = Power consumption · I = Current draw · $LpA_{in}$ = Sound pressure level intake side · $LwA_{in}$ = Sound power level intake side
$LwA_{out}$ = Sound power level outlet side · $q_V$ = Air flow · $p_{fs}$ = Pressure increase



ebm-papst Mulfingen GmbH & Co. KG · Bachmühle 2 · D-74673 Mulfingen · Phone +49 (0) 7938 81-0 · Fax +49 (0) 7938 81-110 · info1@de.ebmpapst.com · www.ebmpapst.com