W3G450-CL12-N1

EC axial fan - HyBlade

sickle-shaped blades (S series)

Fan housing with guard grille, for rail applications

ebm-papst Mulfingen GmbH & Co. KG
Bachmühle 2 · D-74673 Mulfingen
Phone +49 7938 81-0
Fax +49 7938 81-110
info1@de.ebmpapst.com
www.ebmpapst.com

Nominal data

Type	**W3G450-CL12-N1**
Motor	**M3G084-FA**

Phase		3~
Nominal voltage	VAC	400
Nominal voltage range	VAC	380 .. 480
Frequency	Hz	50/60

Method of obtaining data		ml
Speed (rpm)	min^{-1}	1500
Power consumption	W	500
Current draw	A	0.83
Max. back pressure	Pa	150
Max. back pressure	in. wg	0.6
Min. ambient temperature	°C	-40
Max. ambient temperature	°C	60

ml = Max. load · me = Max. efficiency · fa = Free air · cs = Customer specification · ce = Customer equipment
Subject to change

EC axial fan - HyBlade

sickle-shaped blades (S series)

Fan housing with guard grille, for rail applications

Technical description

Weight	12.7 kg
Size	450 mm
Motor size	84
Rotor surface	Painted black
Electronics housing material	Die-cast aluminum, painted black
Impeller material	PA plastic, sheet-metal plate painted black
Support ring material	Stainless steel
Fan housing material	Sheet steel, galvanized and coated with black plastic (RAL 9005)
Number of blades	5
Airflow direction	A
Direction of rotation	Clockwise, viewed toward rotor
Degree of protection	IP55
Insulation class	"F"
Moisture (F) / Environmental (H) protection class	H3
Max. permitted ambient temp. for motor (transport/storage)	+80 °C
Min. permitted ambient temp. for motor (transport/storage)	-40 °C
Installation position	Shaft horizontal or rotor on top; rotor on bottom on request
Condensation drainage holes	None
Mode	S1
Motor bearing	Ball bearing; (sealed)
Technical features	- Output 10 VDC, max. 10 mA - Alarm relay - Integrated PID controller - Run monitoring - Power limiter - Motor current limitation - Emergency operation - PFC, passive - RS-485 MODBUS-RTU - Soft start - EEPROM write cycles: 100,000 maximum - Control input 0-10 VDC / PWM - Control interface with SELV potential safely disconnected from the mains - Overvoltage detection - Thermal overload protection for electronics/motor - Line undervoltage / phase failure detection
EMC regulations	According to EN 50121-3-2
Touch current according to IEC 60990 (measuring circuit Fig. 4, TN system)	<= 3.5 mA
Motor protection	Thermal overload protector (TOP) internally connected
With cable	Lateral
Protection class	I (with customer connection of protective earth)
Conformity with standards	EN 15085-1, CPC3; EN 45545-2, HL3; EN 50155; EN 61373, Cat. 1B
Approval	EAC

ebmpapst

Comment	A prerequisite for operation is a Class 1 vehicle electrical system architecture according to EN 50533; if supply potential (e.g. 230 VAC) is passed through the alarm relay, the SELV signal wires lose their property of reinforced insulation and they then have only basic insulation The SELV property (reinforced insulation) is not lost when voltages of up to 110 VDC are passed through the alarm relay.

EC axial fan - HyBlade

sickle-shaped blades (S series)

Fan housing with guard grille, for rail applications

Product drawing

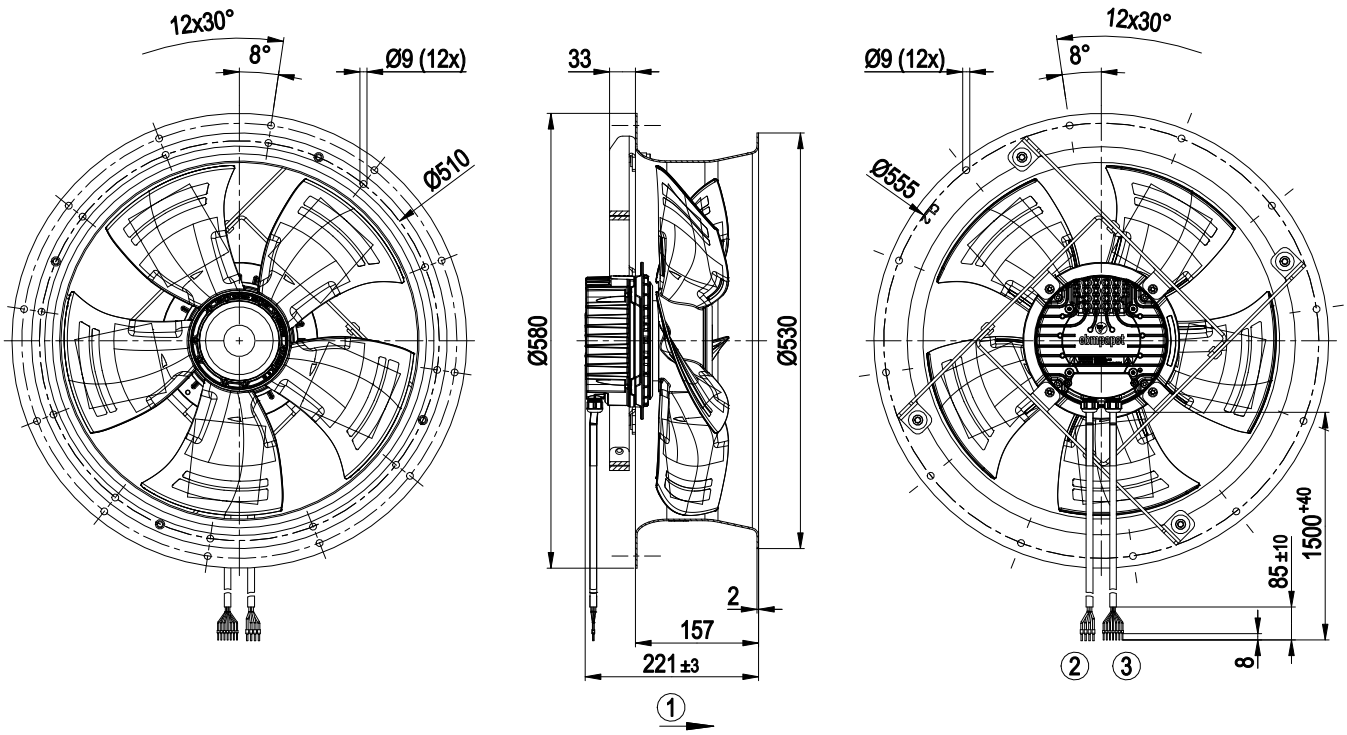

1	Direction of air flow "A"
2	Cable, halogen-free, railway application EN 45545, 4G 1.5 mm²
	4x wire-end ferrule
3	Cable, halogen-free, railway application EN 45545, 7X 0.5 mm²
	7x wire-end ferrule

EC axial fan - HyBlade

sickle-shaped blades (S series)

Fan housing with guard grille, for rail applications

Connection diagram

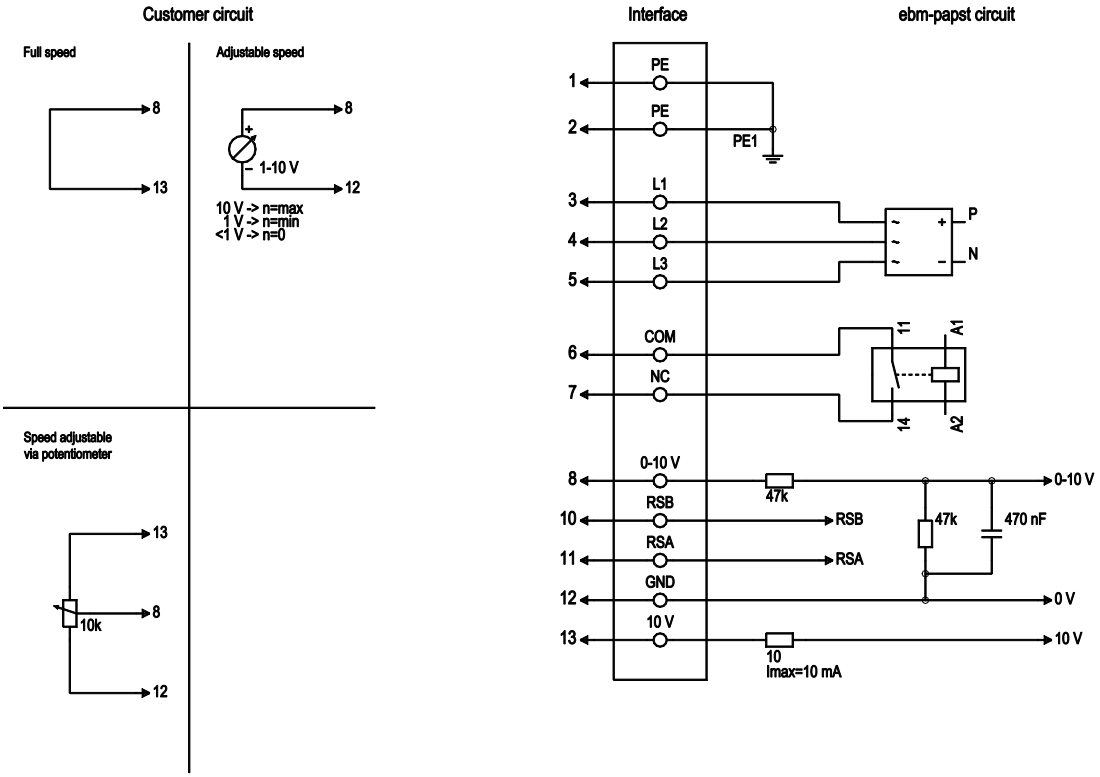

No.	Conn.	Designation	Color	Function/assignment
1	1	PE	green/yellow	Protective earth
1	2	PE	-	not brought out via wire
1	3	L1	black	Power supply, phase 50/60 Hz
1	4	L2	blue	Power supply, phase 50/60 Hz
1	5	L3	brown	Power supply, phase 50/60 Hz
2	6	COM	gray	Status relay, floating status contact, common connection, contact rating 250 VAC / max. 2 A (AC1), min. 1 mA / 5 VDC, reinforced insulation on control interface side, basic insulation on supply side according to EN 50124-1
2	7	NC	orange	Status relay, floating status contact, break for failure, contact rating 250 VAC / max. 2 A (AC1), min. 1 mA / 5 VDC, reinforced insulation on control interface side, basic insulation on supply side according to EN 50124-1
2	8	0-10V	yellow	Analog input (set value) SELV, 0-10 V, Ri = 100 kΩ, adjustable curve
2	10	RSB	brown	RS485 interface for MODBUS, RSB; SELV
2	11	RSA	white	RS485 interface for MODBUS, RSA; SELV
2	12	GND	blue	Reference ground for control interface, SELV
2	13	+10V	red	Fixed voltage output 10 VDC, +10 V ± 3%, max. 10 mA, short-circuit-proof, power supply for external devices (e.g. pot); SELV

W3G450-CL12-N1

EC axial fan - HyBlade

sickle-shaped blades (S series)

Fan housing with guard grille, for rail applications

Curves: Air performance 50 Hz

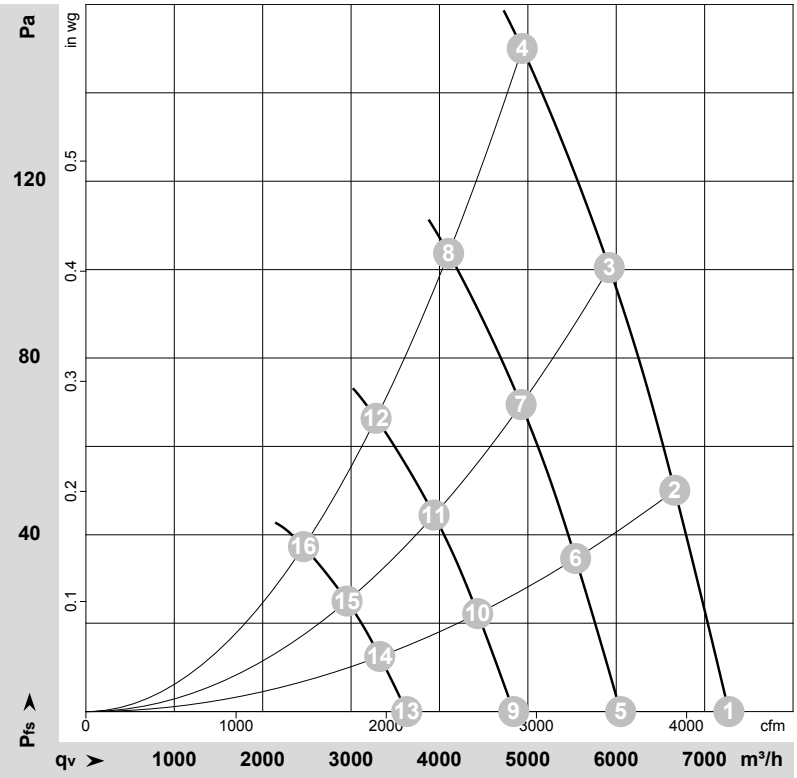

ρ = 1.15 kg/m³ ± 2 %

Measurement: LU-184165-1

Air performance measured according to ISO 5801 installation category A. For detailed information on the measurement setup, contact ebm-papst. Intake sound level: Sound power level according to ISO 13347 / sound pressure level measured at 1 m distance from fan axis. The values given are valid under the specified measuring conditions and may vary due to conditions of installation. For deviations from the standard configuration, the parameters have to be checked on the installed unit.

Measured values

	U	f	n	P_{ed}	I	LpA_{in}	LwA_{in}	LwA_{out}	q_V	p_{fs}	q_V	p_{fs}
	V	Hz	min^{-1}	W	A	dB(A)	dB(A)	dB(A)	m^3/h	Pa	cfm	in. wg
1	400	50	1500	391	0.66	69	76	77	7275	0	4280	0.00
2	400	50	1500	441	0.73	65	72	73	6660	50	3920	0.20
3	400	50	1500	481	0.78	63	70	71	5920	100	3485	0.40
4	400	50	1500	500	0.83	65	72	72	4935	150	2905	0.60
5	400	50	1250	225	0.38	64	71	72	6050	0	3560	0.00
6	400	50	1250	254	0.42	61	68	69	5540	36	3260	0.14
7	400	50	1250	277	0.45	58	66	66	4925	71	2900	0.29
8	400	50	1250	293	0.47	60	68	67	4105	104	2415	0.42
9	400	50	1000	115	0.19	59	66	66	4840	0	2850	0.00
10	400	50	1000	130	0.21	55	62	63	4430	23	2610	0.09
11	400	50	1000	142	0.23	53	60	60	3940	45	2320	0.18
12	400	50	1000	150	0.24	54	62	61	3285	67	1930	0.27
13	400	50	750	49	0.08	51	58	59	3630	0	2135	0.00
14	400	50	750	55	0.09	48	55	56	3325	13	1955	0.05
15	400	50	750	60	0.10	45	53	53	2955	25	1740	0.10
16	400	50	750	63	0.10	47	55	54	2460	38	1450	0.15

U = Voltage · f = Frequency · n = Speed (rpm) · P_{ed} = Power consumption · I = Current draw · LpA_{in} = Sound pressure level intake side · LwA_{in} = Sound power level intake side
LwA_{out} = Sound power level outlet side · q_V = Air flow · p_{fs} = Pressure increase

ebmpapst